LOI 905 - LINE MONITOR
LOI 900
GEN. DYNAMICS

UNIVERSAL paper goods

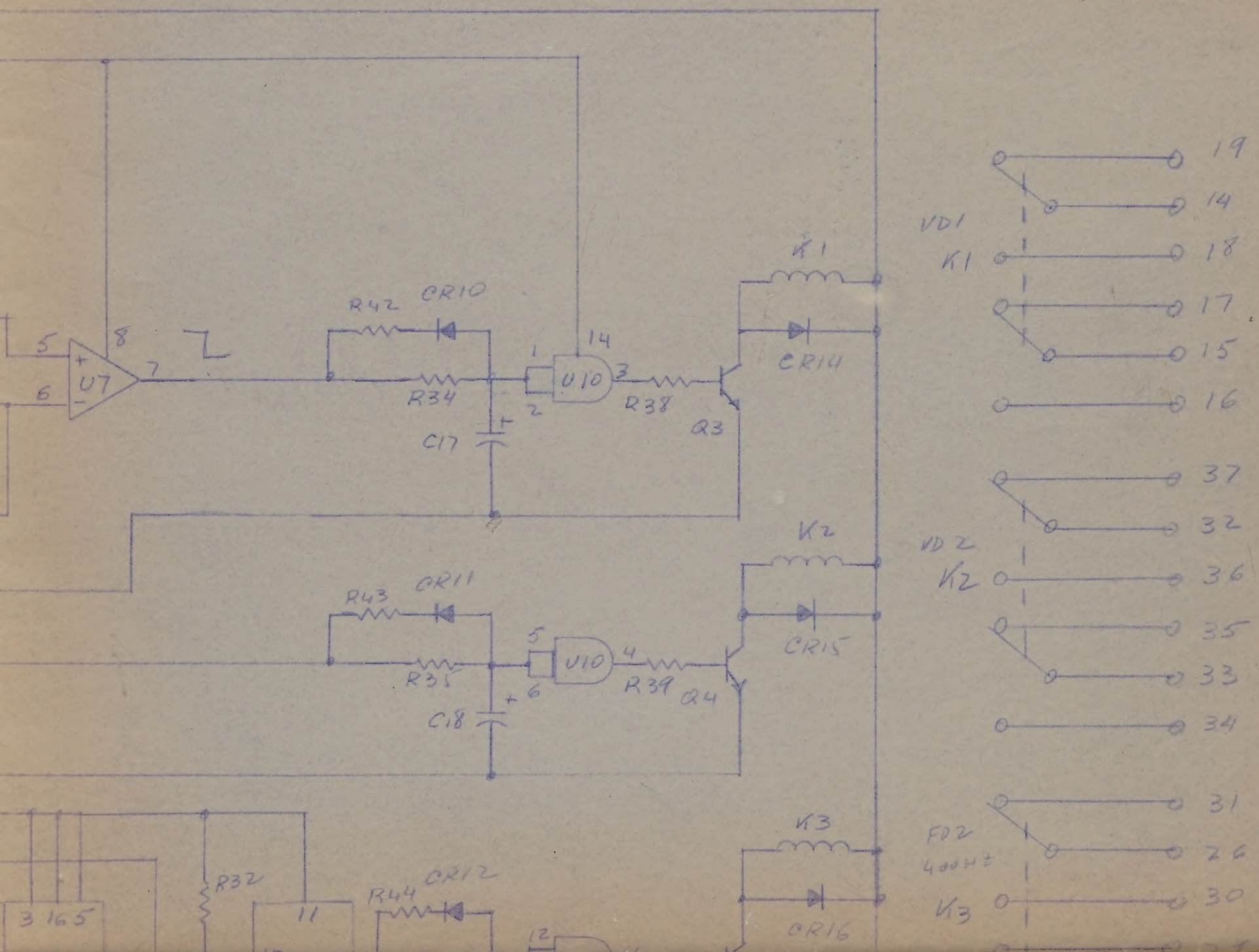
U7
5
6
8
7
R42
CR10
R34
C17
1
2
14
U10
3
R38
Q3
K1
CR14
VD1
K1
19
14
18
17
15
16
R43
CR11
R35
C18
5
6
U10
4
R39
Q4
K2
CR15
VD2
K2
37
32
36
35
33
34
R32
3 16 5
11
R44
CR12
12
K3
CR16
FD2
400Hz
K3
31
26
30

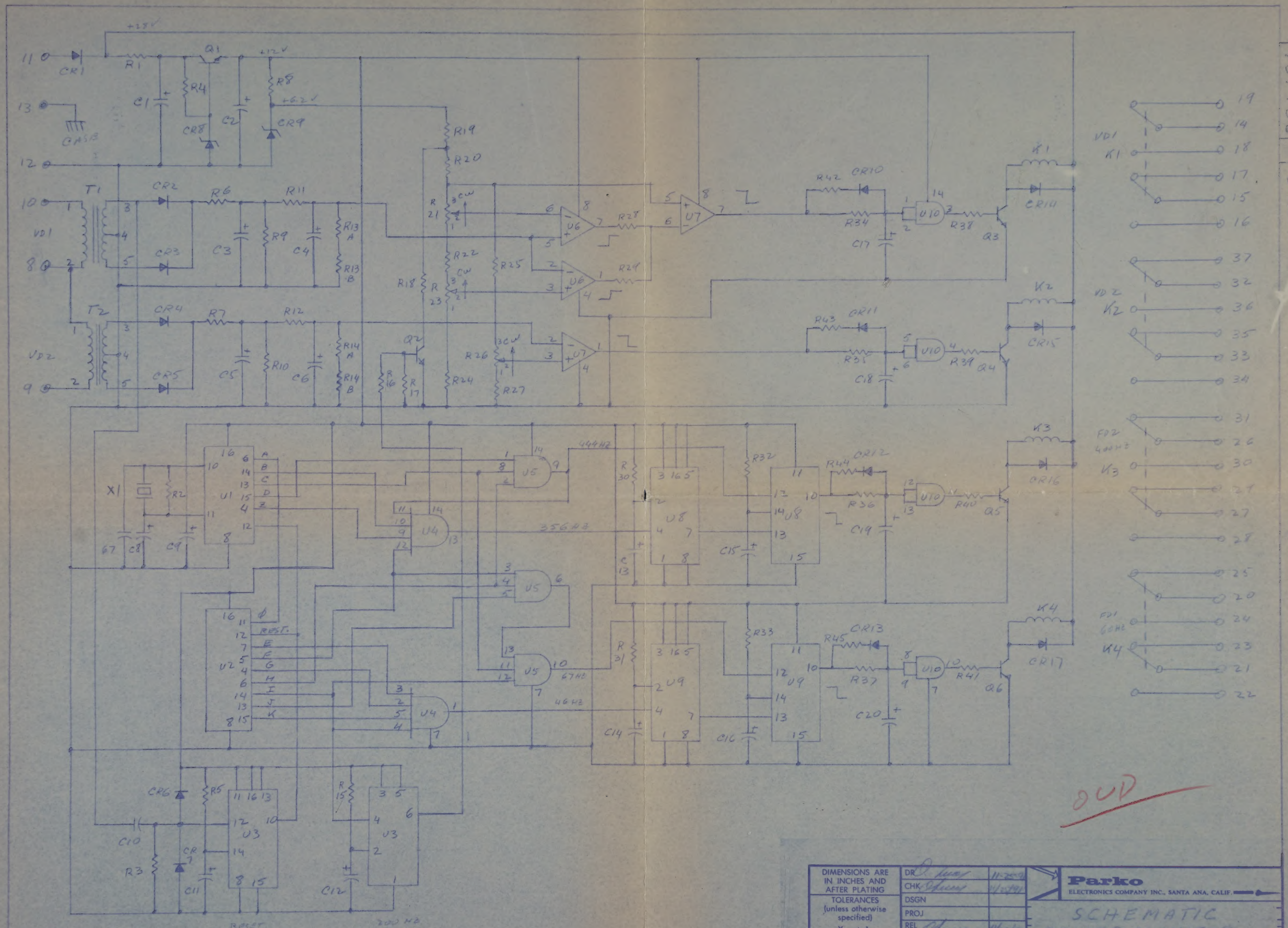

DIMENSIONS ARE IN INCHES AND AFTER PLATING	DR	11-25-9	Parko ELECTRONICS COMPANY INC., SANTA ANA, CALIF.
TOLERANCES (unless otherwise specified) .X ±.1 .XX ±.03 .XXX±.010 ANGLES±0.5°	CHK	11-6-91	SCHEMATIC POWER MONITOR
	DSGN		
	PROJ		
	REL	11-6-91	
MACH SURF ✓	APPROVED		CODE IDENT NO. 13979 · SIZE · 101906 · REV
	APPROVED		
	DO NOT SCALE DRAWING		SCALE NONE · SHEET 1 OF 1

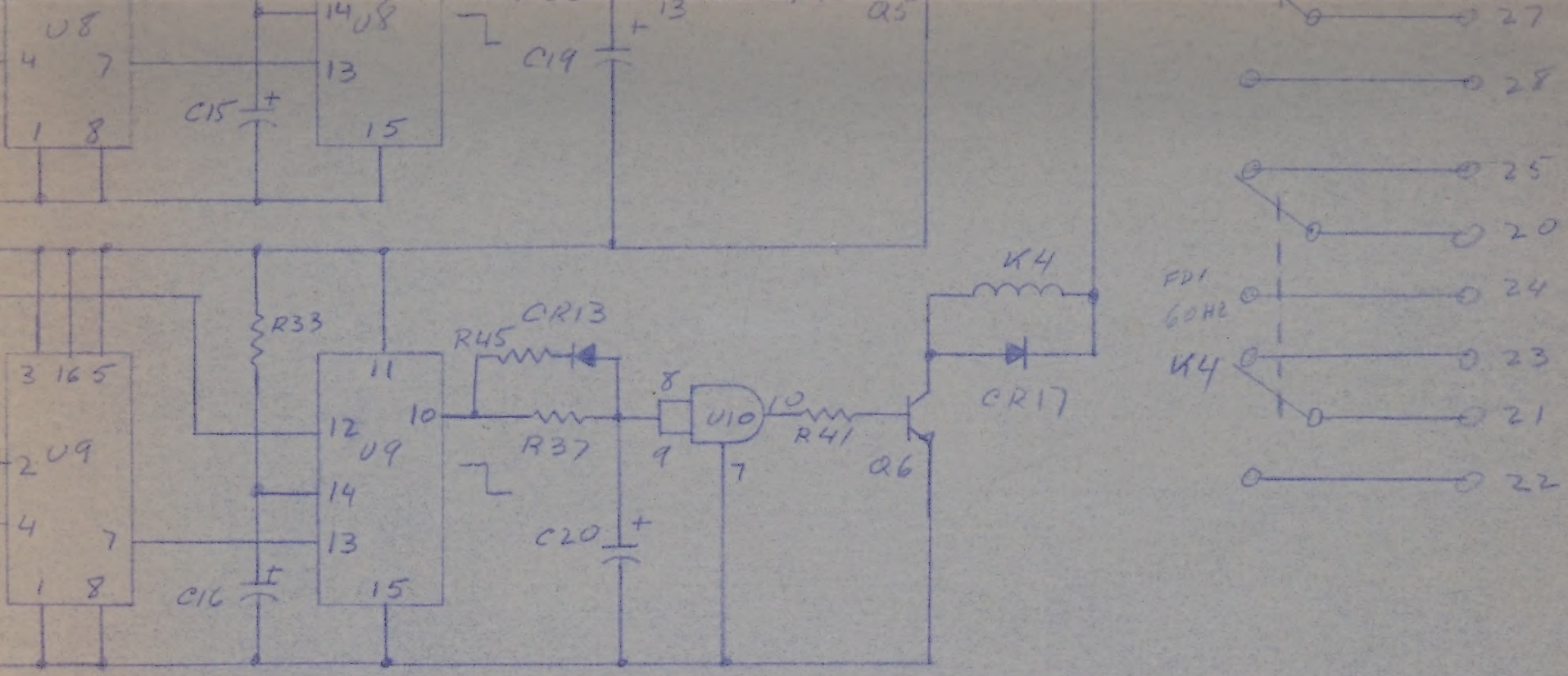

OUD

DIMENSIONS ARE IN INCHES AND AFTER PLATING	DR	11-25-91	Parko ELECTRONICS COMPANY INC., SANTA ANA, CALIF.
TOLERANCES (unless otherwise specified) .X ±.1 .XX ±.03 .XXX±.010 ANGLES±0.5°	CHK	11/25/91	SCHEMATIC POWER MONITOR
	DSGN		
	PROJ		
	REL	11/25/91	
	APPROVED		CODE IDENT NO. 13979 / SIZE / 101906 / REV
MACH SURF ✓	APPROVED		
	DO NOT SCALE DRAWING		SCALE NONE / SHEET 1 OF 1

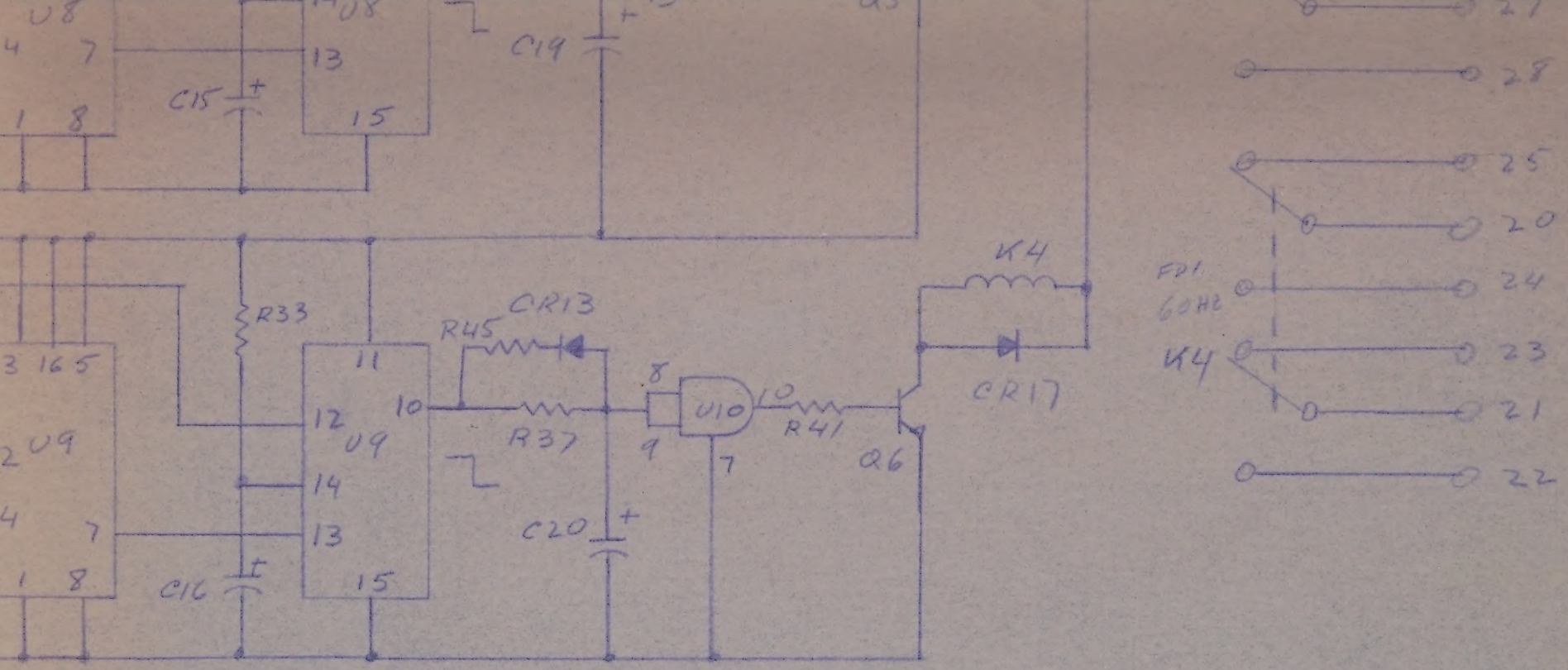

OUD

DIMENSIONS ARE IN INCHES AND AFTER PLATING	DR	11-25-91	Parko ELECTRONICS COMPANY INC., SANTA ANA, CALIF.
	CHK	11/25/91	
TOLERANCES (unless otherwise specified)	DSGN		SCHEMATIC POWER MONITOR
.X ±.1	PROJ		
.XX ±.03	REL	11/25/91	
.XXX±.010	APPROVED		
ANGLES±0.5°	APPROVED		CODE IDENT NO. 13979 / SIZE / 101906 / REV
MACH SURF ✓			

POWER MONITOR

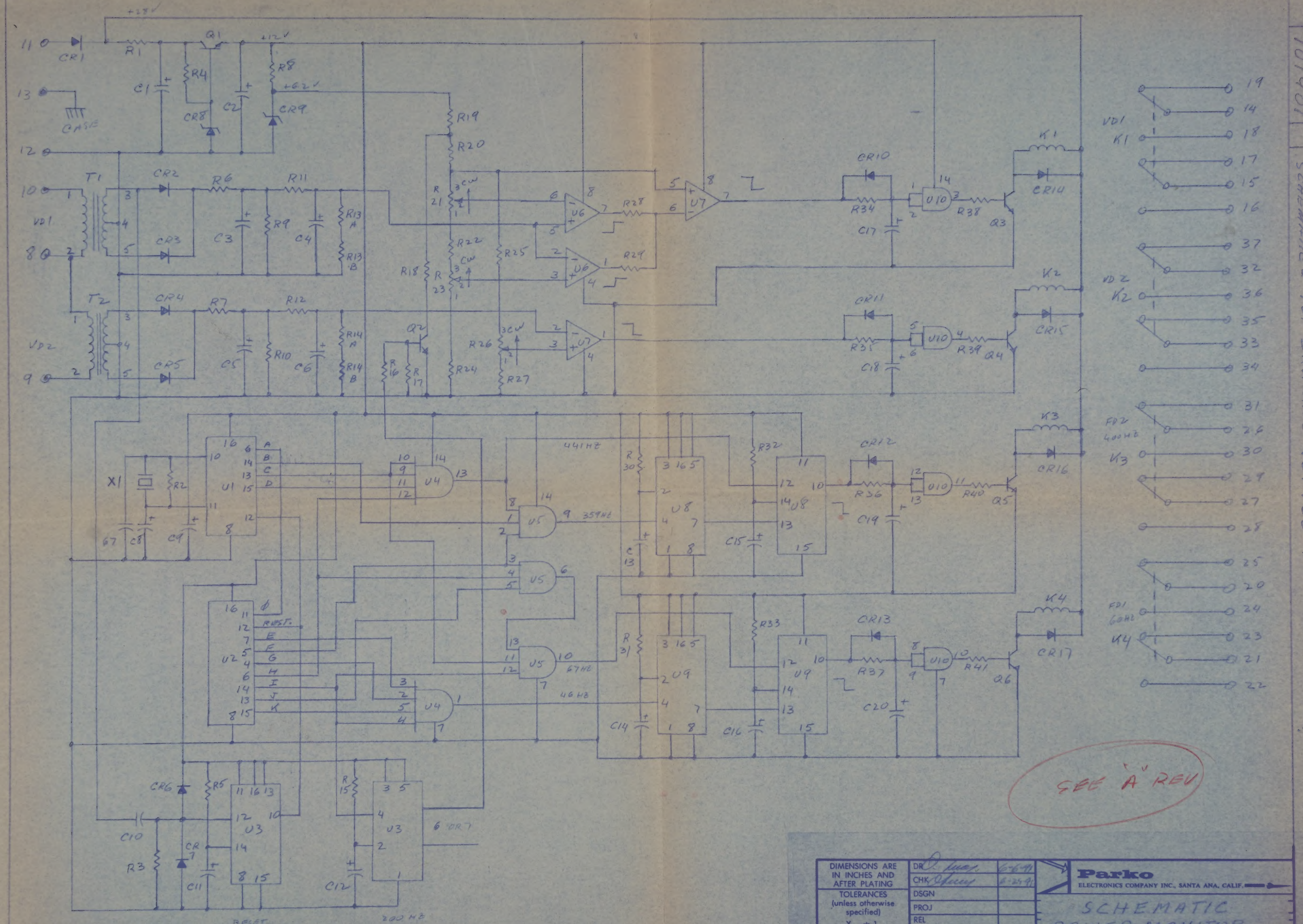

DIMENSIONS ARE IN INCHES AND AFTER PLATING	DR		Parko ELECTRONICS COMPANY INC., SANTA ANA, CALIF.
TOLERANCES (unless otherwise specified) .X ±.1 .XX ±.03 .XXX±.010 ANGLES±0.5°	CHK		SCHEMATIC POWER MONITOR
	DSGN		
	PROJ		
	REL		
MACH SURF ✓	APPROVED		CODE IDENT NO. 13979 / SIZE / 101901 / REV
	APPROVED		
	DO NOT SCALE DRAWING		SCALE NONE / SHEET 1 OF 1

101901 | SCHEMATIC - TOP DRAWING 101900 - POWER MONITOR

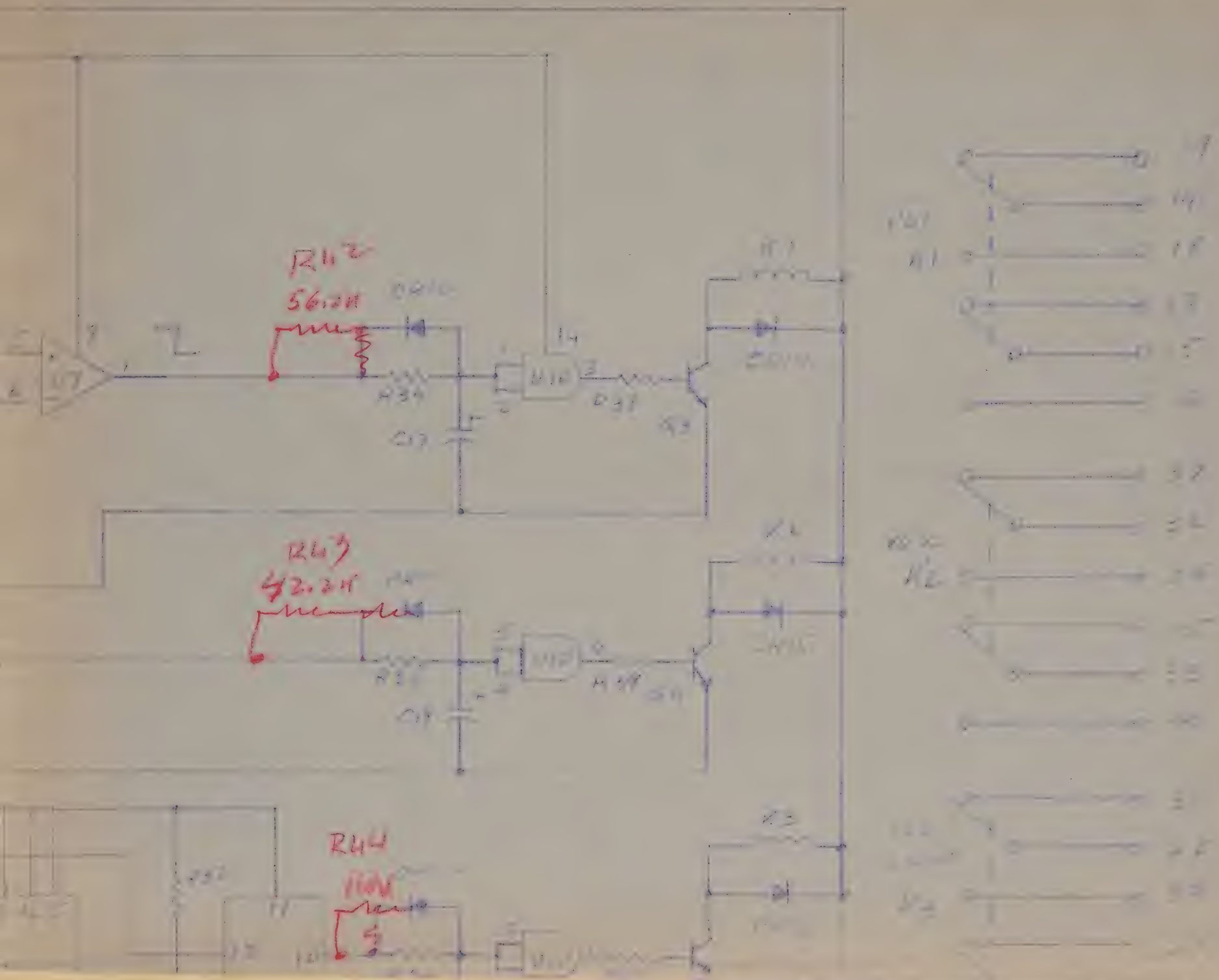

6 R

CHEMATIC - TOP DRAWING 1801

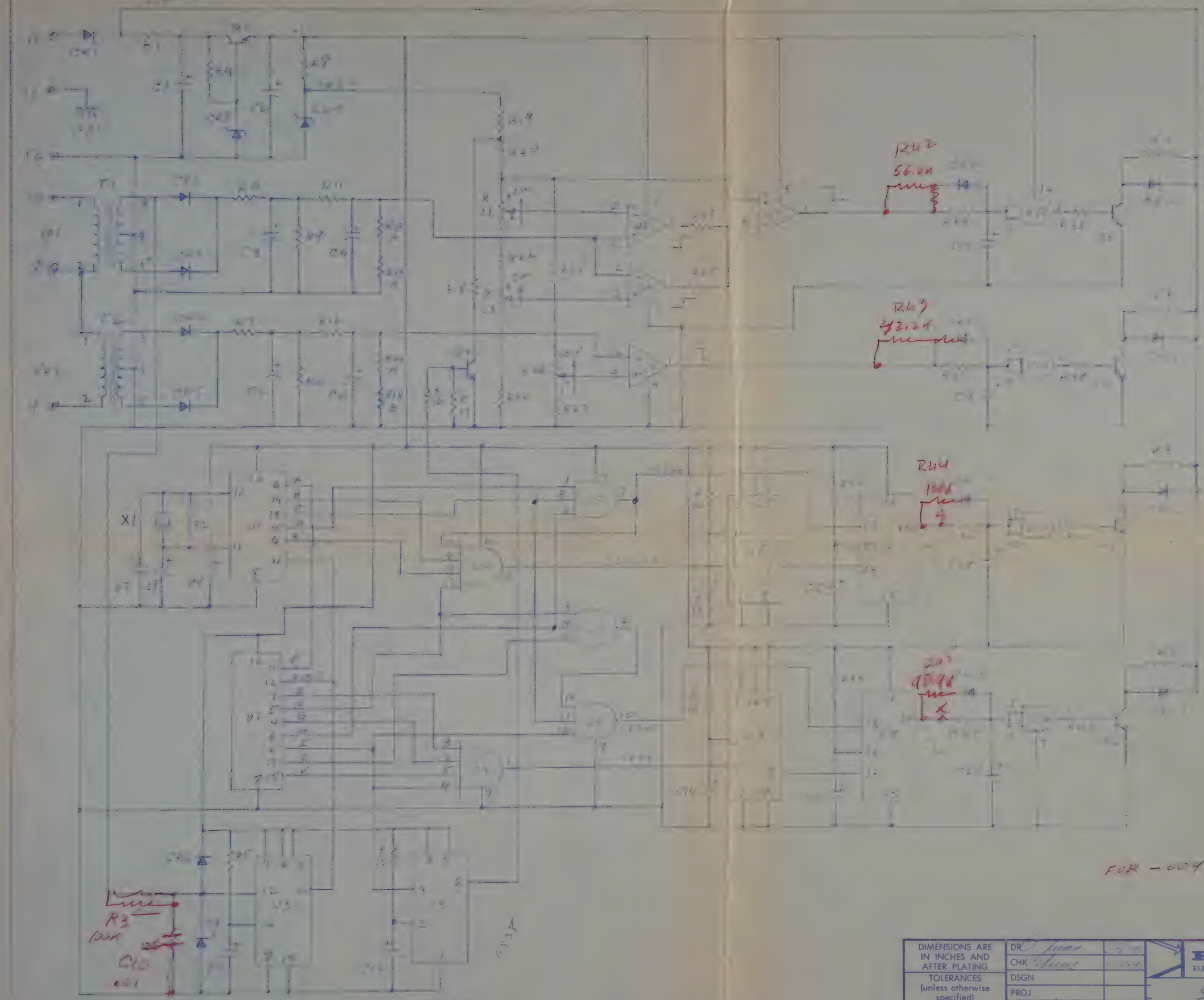

DIMENSIONS ARE IN INCHES AND AFTER PLATING	DR		Parko ELECTRONICS COMPANY INC., SANTA ANA, CALIF.
TOLERANCES (unless otherwise specified) .X ±.1 .XX ±.03 XXX ±.010 ANGLES ±0.5°	CHK		SCHEMATIC POWER MONITOR
	DSGN		
	PROJ		
	REL	1-26-71	
	APPROVED		CODE IDENT NO. 13979 / SIZE / 101906 / REV A
MACH SURF ✓	APPROVED		
	DO NOT SCALE DRAWING		SCALE / SHEET 1 OF 1

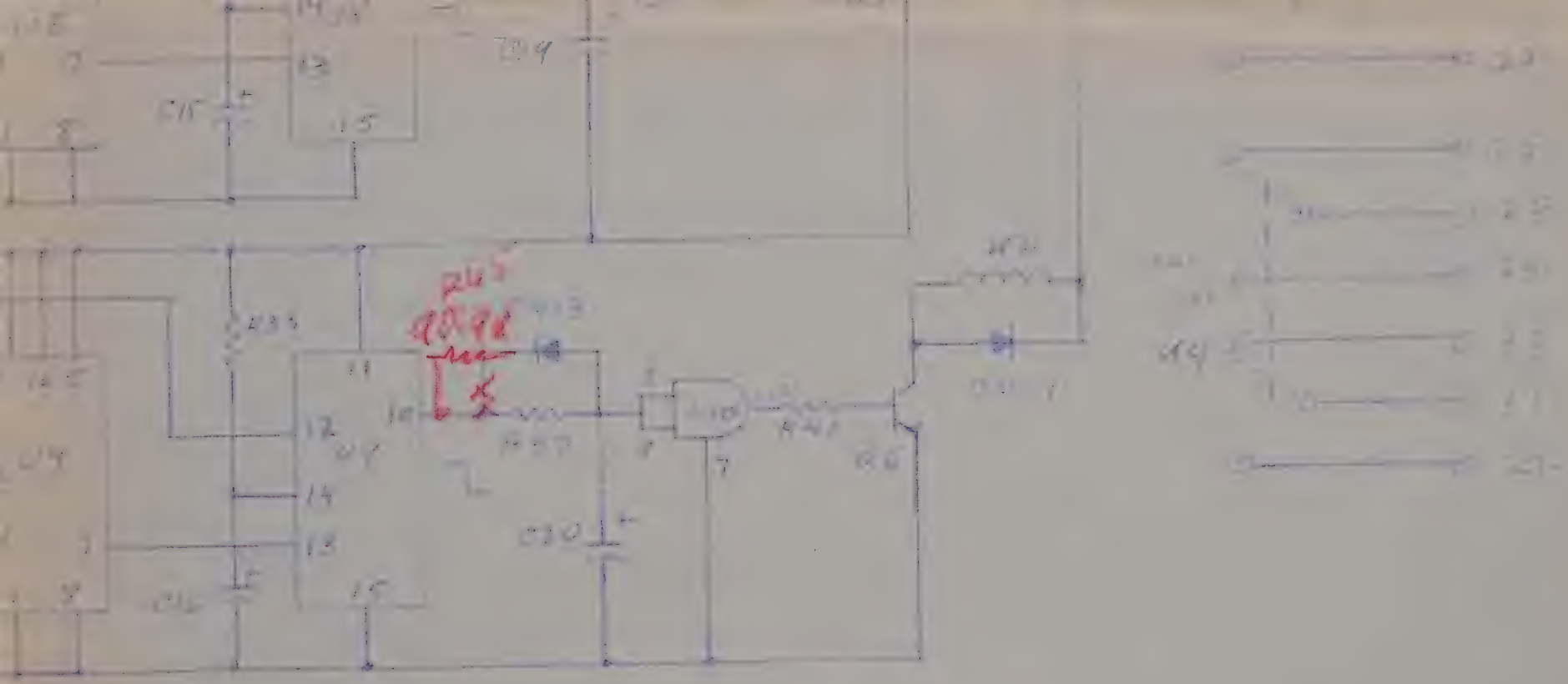

FOR -009

DIMENSIONS ARE IN INCHES AND AFTER PLATING	DR		**Parko** ELECTRONICS COMPANY INC., SANTA ANA, CALIF.
TOLERANCES (unless otherwise specified) .X ±.1 .XX ±.03 .XXX ±.010 ANGLES ±0.5°	CHK		
	DSGN		SCHEMATIC POWER MONITOR
	PROJ		
	REL		
MACH SURF √	APPROVED		CODE IDENT NO. 13979 / SIZE / 101906 / REV A
	APPROVED		
	DO NOT SCALE DRAWING		SCALE / SHEET 1 OF 1

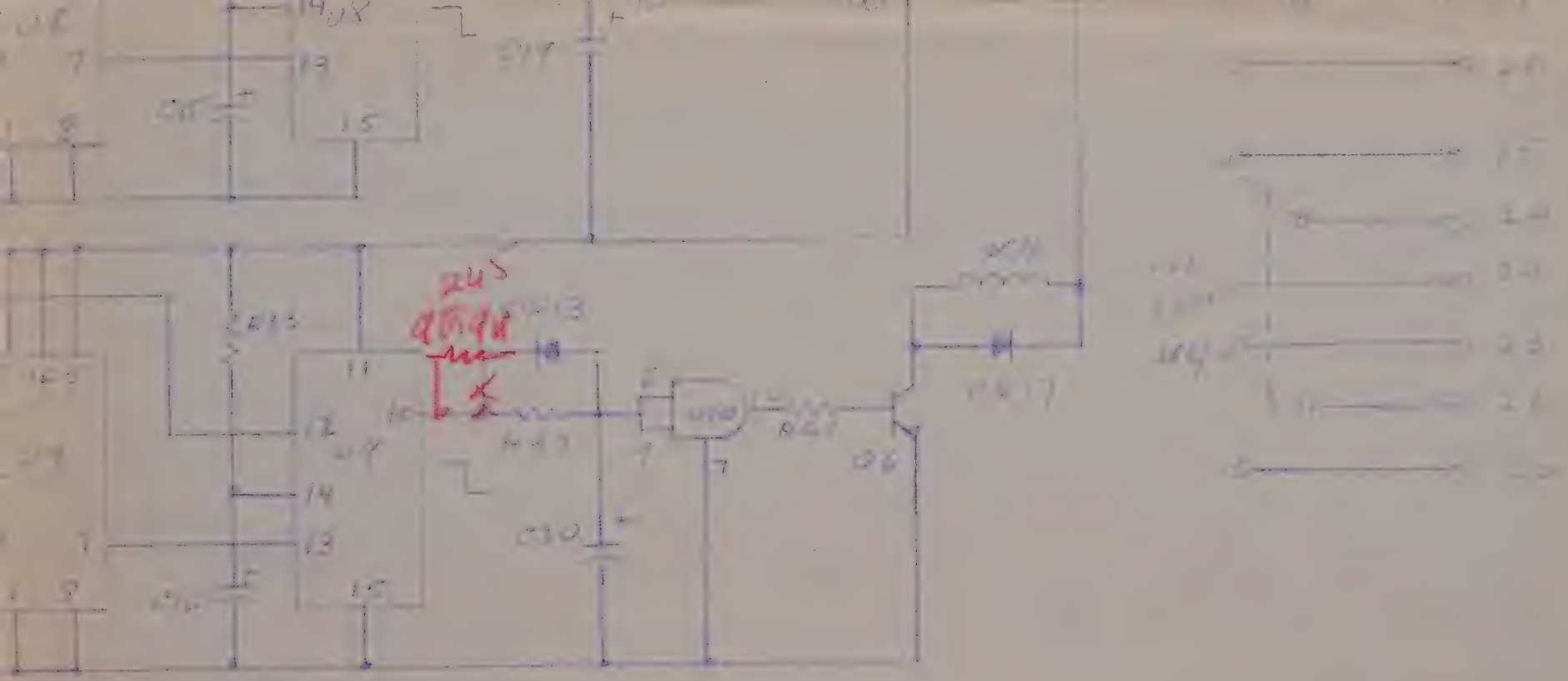

FOR — 009

DIMENSIONS ARE IN INCHES AND AFTER PLATING	DR		**Parko** ELECTRONICS COMPANY INC., SANTA ANA, CALIF.
TOLERANCES (unless otherwise specified) .X ±.1 .XX ±.03 .XXX ±.010 ANGLES ±0.5°	CHK		
	DSGN		SCHEMATIC POWER MONITOR
	PROJ		
	REL		
MACH SURF ✓	APPROVED		CODE IDENT NO. 13979 / SIZE / 101926 / REV A
	APPROVED		
	DO NOT SCALE DRAWING		SCALE / SHEET OF

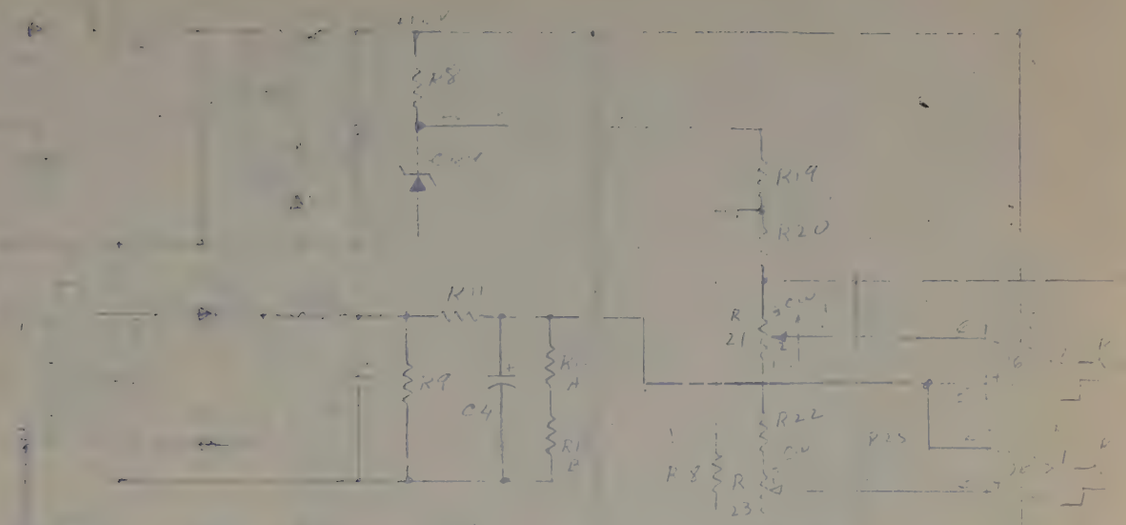

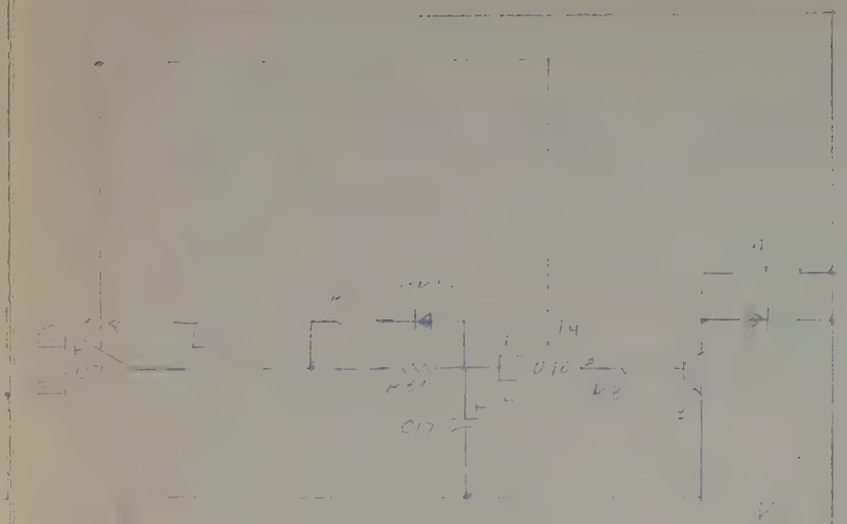

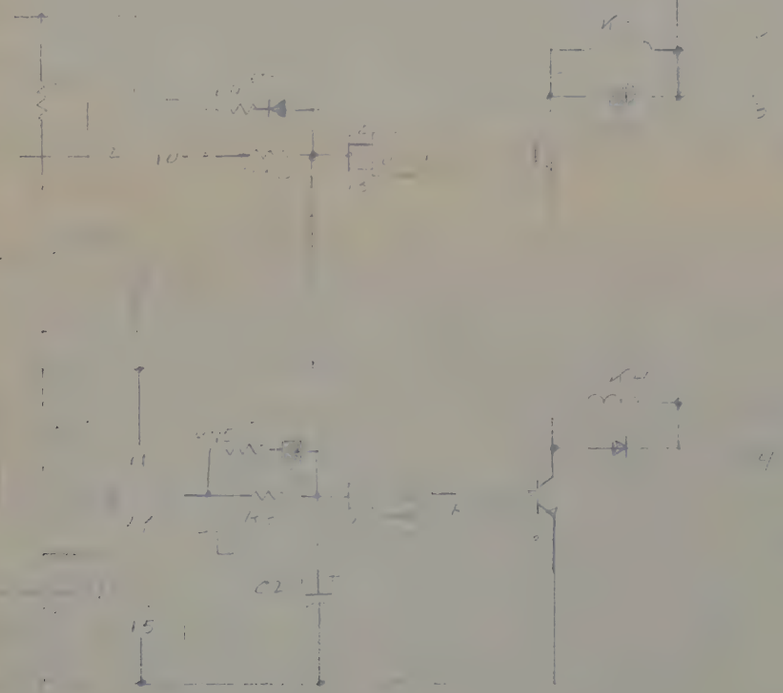

DIMENSIONS ARE IN INCHES AND AFTER PLATING	DR	**Parko** ELECTRONICS COMPANY INC., SANTA ANA, CALIF.
TOLERANCES (unless otherwise specified) .X ± .1 .XX ± .03 .XXX ± .010 ANGLES ± 0.5°	CHK	
	DSGN	
	PROJ	
	REL	
MACH SURF ✓	APPROVED	CODE IDENT NO. 13979 · SIZE · 101316 · REV
	APPROVED	
	DO NOT SCALE DRAWING	SCALE · SHEET · OF

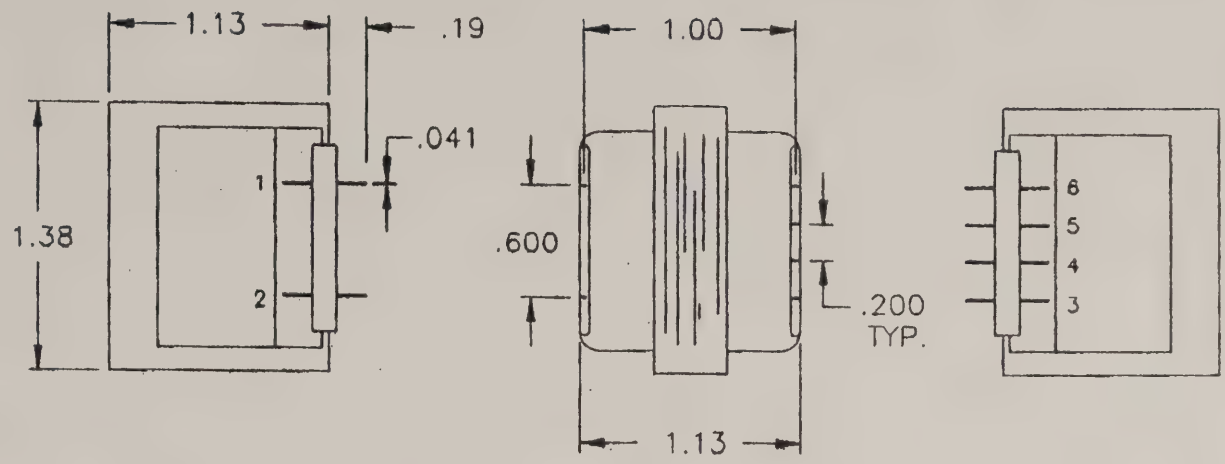

PRIMARY:
Approx 11,000 turns #40

SECONDARY:
Approx 2,400 turns #40

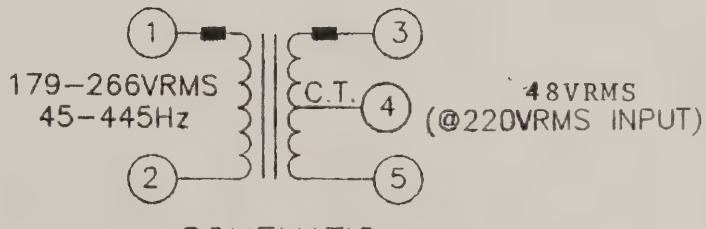

SCHEMATIC

NOTES: UNLESS OTHERWISE SPECIFIED

1. BUILT TO MEET CONSTRUCTION REQ'S OF MIL-T-27E TYPE TF6R03ZZ.
2. DEVICE TO WITHSTAND APPLIED INPUT POTENTIAL OF 300VRMS 40Hz WITHOUT DAMAGE.
3. OUTPUT LOAD IMPEDANCE=6000 OHMS.
4. SECONDARY TO TRACK PRIMARY VOLTAGE IN A LINEAR FASHION THROUGHOUT NOMINAL INPUT RANGE OF 179–266VRMS.
5. DIELECTRIC WITHSTANDING VOLTAGE: 1500VRMS
6. TERMINAL 6: NO CONNECTION.

Standard Sizes

EI Core
mid range
thickness

DIMENSIONS ARE IN INCHES AND AFTER PLATING	DR		Parko ELECTRONICS COMPANY INC., SANTA ANA, CALIF.
TOLERANCES (unless otherwise specified) .X ±.1 .XX ±.03 .XXX±.010 ANGLES±0.5°	CHK		
	DSGN		
	PROJ		
	REL		
MACH SURF ✓	APPROVED		CODE IDENT NO. 13979 / SIZE A / REV
	APPROVED		
	DO NOT SCALE DRAWING		SCALE / SHEET OF

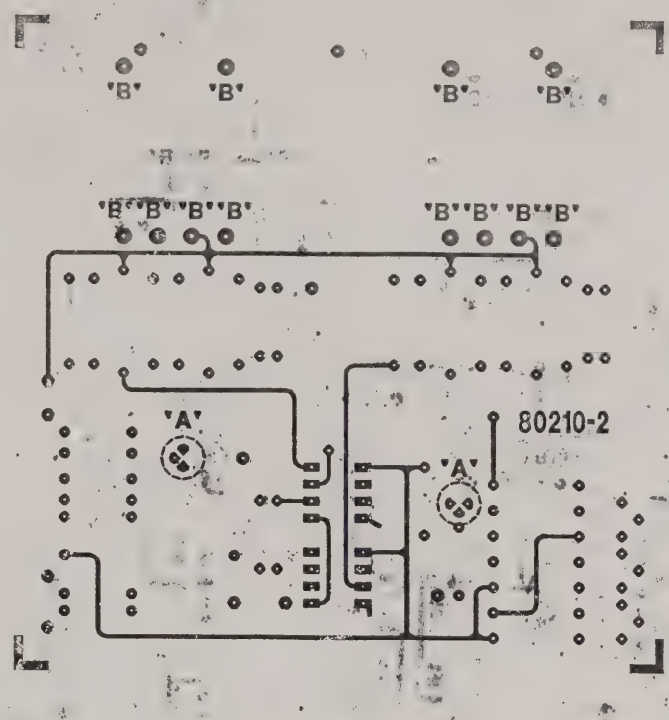

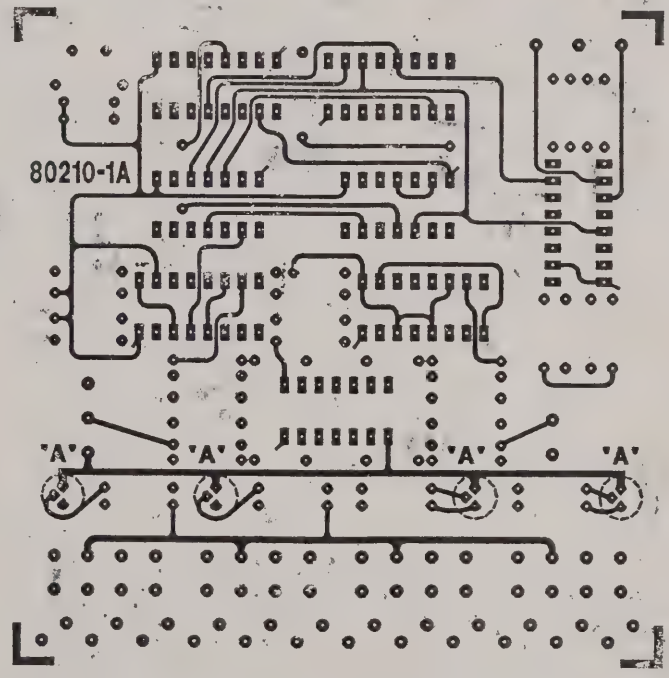

5. HOLE DIM. AFTER PLATING
   ALL HOLES .035 EXCEPT:
   "A" (18 HOLES) .025
   "B" (12 HOLES) .046
4. ALL HOLES PLATED THRU
3. SOLDER PLATE & FUSE
2. MATERIAL .047" ~~.063~~, GLASS EPOXY, 2 OZ, COPPER
1. TOP DRAWING 101905

NOTES:

DIMENSIONS ARE IN INCHES AND AFTER PLATING	DR		Parko ELECTRONICS COMPANY INC., SANTA ANA, CALIF.
TOLERANCES (unless otherwise specified) .X ±.1 .XX ±.03 .XXX±.010 ANGLES±0.5°	CHK		P. C. BOARD POWER MONITOR
	DSGN		
	PROJ		
	REL		
	APPROVED		CODE IDENT NO. 13979 / SIZE A / 80210 / REV A
MACH SURF ✓	APPROVED		
	DO NOT SCALE DRAWING		SCALE NONE / SHEET 1 OF 1

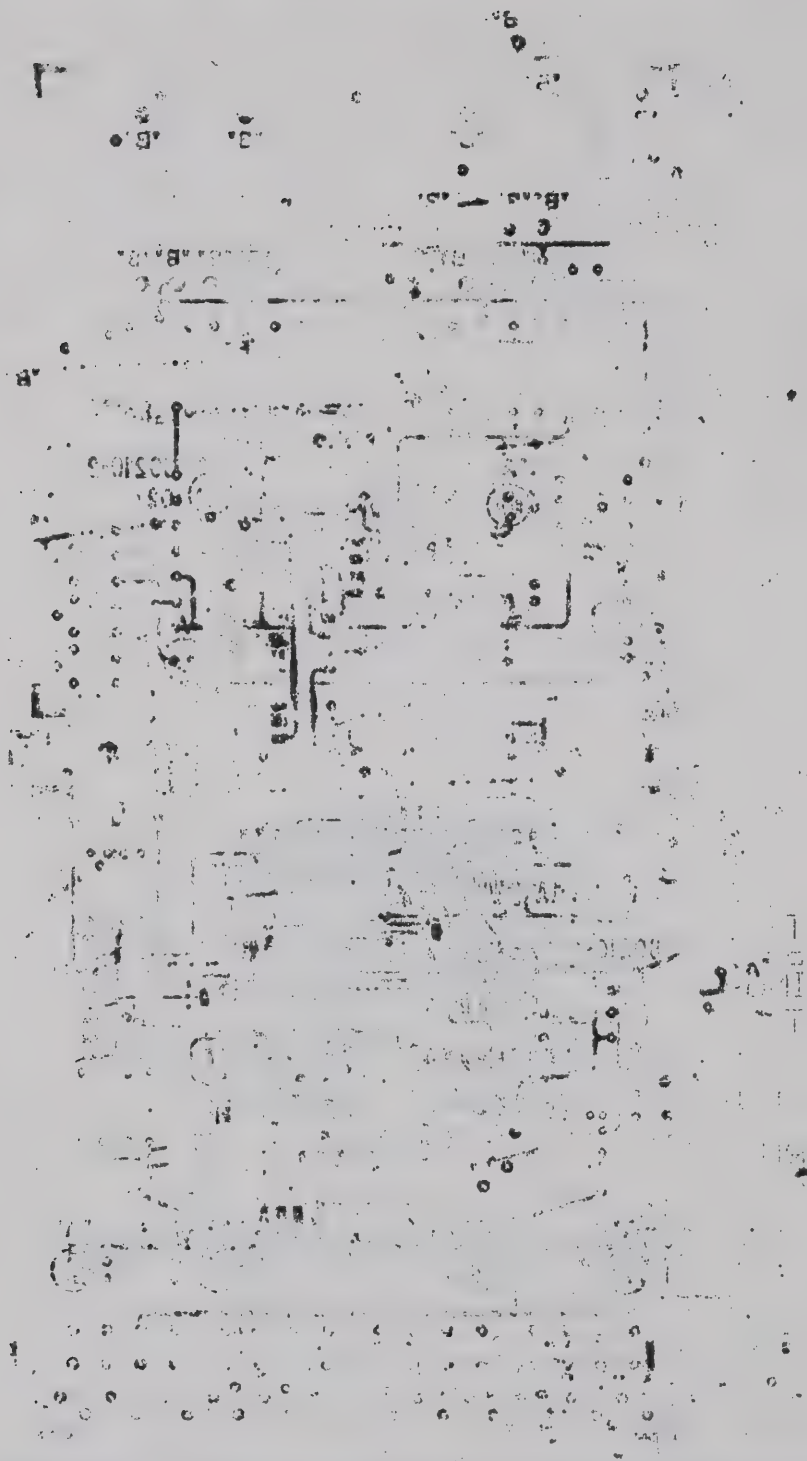

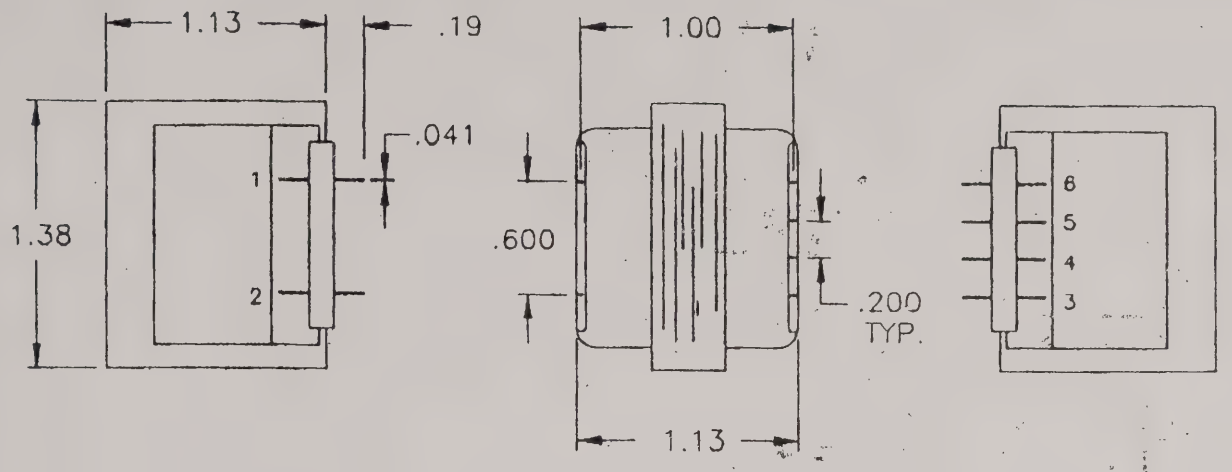

PRIMARY:
Approx 11,000 turns #40

SECONDARY:
Approx 2,400 turns #40

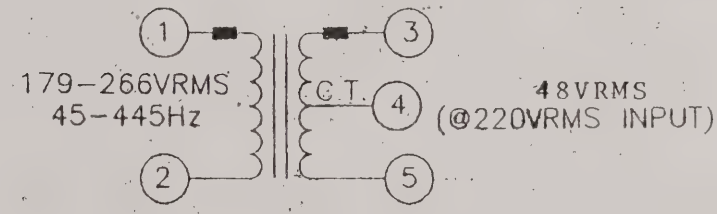

SCHEMATIC

NOTES: UNLESS OTHERWISE SPECIFIED

1. BUILT TO MEET CONSTRUCTION REQ'S OF MIL-T-27E TYPE TF6R03ZZ.
2. DEVICE TO WITHSTAND APPLIED INPUT POTENTIAL OF 300VRMS 40Hz WITHOUT DAMAGE.
3. OUTPUT LOAD IMPEDANCE=6000 OHMS.
4. SECONDARY TO TRACK PRIMARY VOLTAGE IN A LINEAR FASHION THROUGHOUT NOMINAL INPUT RANGE OF 179-266VRMS.
5. DIELECTRIC WITHSTANDING VOLTAGE: 1500VRMS
6. TERMINAL 6: NO CONNECTION.

DIMENSIONS ARE IN INCHES AND AFTER PLATING	DR	Parko ELECTRONICS COMPANY INC., SANTA ANA, CALIF.	
TOLERANCES (unless otherwise specified) .X ±.1 .XX ±.03 .XXX±.010 ANGLES±0.5°	CHK		
	DSGN		
	PROJ	TRANSFORMER	
	REL		
	APPROVED	CODE IDENT NO. 13979 / SIZE A / 60071	REV
MACH SURF ✓	APPROVED		
	DO NOT SCALE DRAWING	SCALE	SHEET OF 1

60071

TRANSFORMER

/ 101900

6-7-90

ABBOTT TRANSFORMERS — PRIMARY CURRENT CHECKED WITH A 1Ω RESISTOR IN SERIES AND 10K LOAD ON SECONDARY

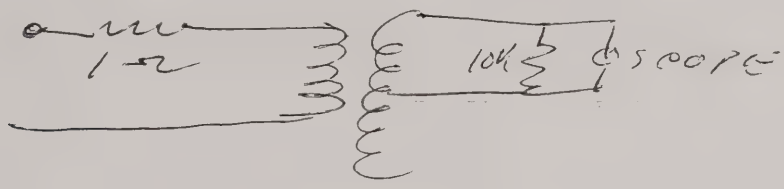

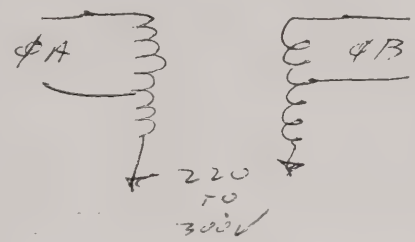

INPUT 60HZ:

220V — .50 MV —
250V — .72 MV —
275V — 1.02 MV —
300V — 1.59 MV —

} SINE WAVE O.K.

50HZ

220V — .85 MV —
250V — 1.54 MV —
275V — 2.47 MV —
300V — 3.82 MV —

} SINE WAVE O.K.

45HZ.

220V — 1.36 MV —
250V — 2.66 MV —

} SINE O.K.

275V — 3.69 MV —
300V — 5.17 MV —

} SOME DISTORTION

40HZ:

220V — 2.51 MV — SINE O.K.
250V — 3.88 MV — SOME DISTORTION
275V — 5.52 MV — → DISTORTION
300V — 6.58 MV — MORE DISTORTION

/ 101900

6-4-90

ABBOTT TRANSFORMERS — PRIMARY CURRENT CHECKED WITH A 1Ω RESISTOR IN SERIES AND 10K LOAD ON SECONDARY

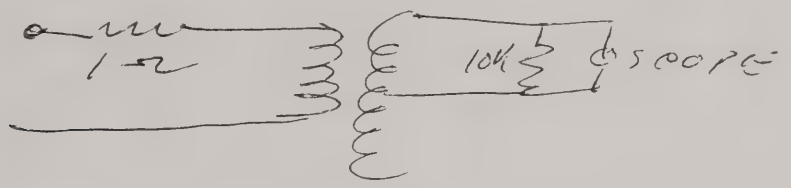

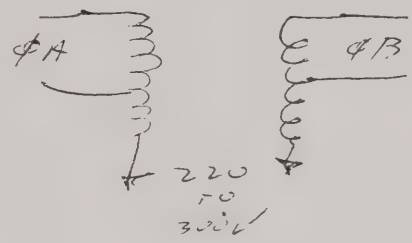

INPUT

60HZ:

220V — .50 MV —
250V — .72 MV —
275V — 1.07 MV —
300V — 1.59 MV —

SINE WAVE O.K.

50HZ

220V — .85MV —
250V — 1.54MV —
275V — 2.47MV —
300V — 3.82MV —

SINE WAVE O.K.

45HZ.

220V — 1.36MV —
250V — 2.66MV —

SINE O.K.

275V — 3.69MV —
300V — 5.17MV —

SOME DISTORTION

40HZ:

220V — 2.51MV — SINE O.K.
250V — 3.88MV — SOME DISTORTION
275V — 5.52MV — DISTORTION
300V — 6.58MV — MORE DISTORTION

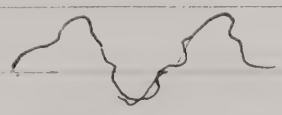

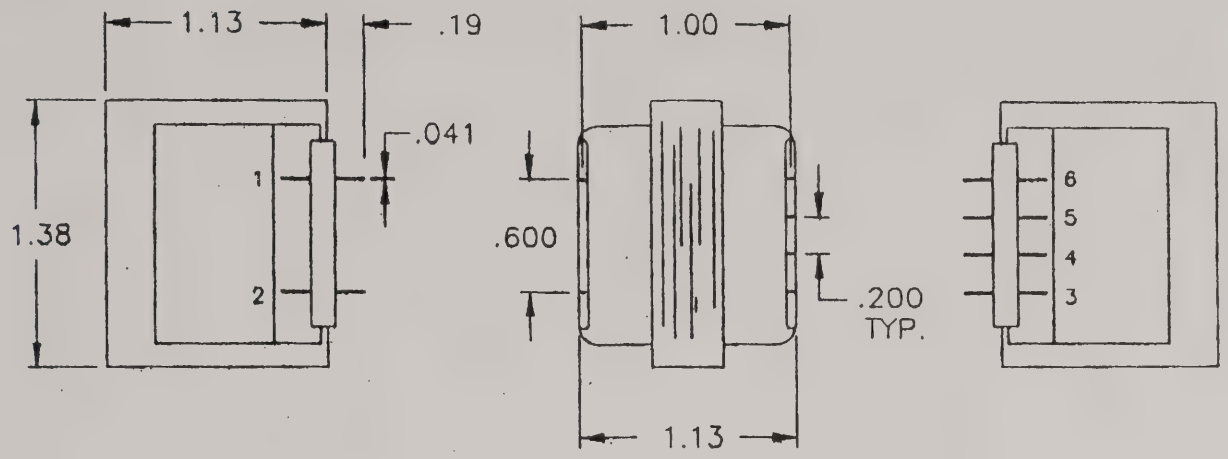

PRIMARY:
Approx 11,000 turns #40

SECONDARY:
Approx 2,400 turns #40

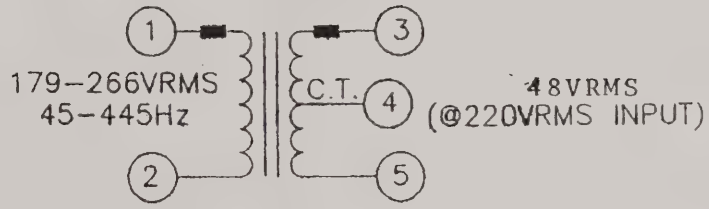

SCHEMATIC

NOTES: UNLESS OTHERWISE SPECIFIED

1. BUILT TO MEET CONSTRUCTION REQ'S OF MIL-T-27E TYPE TF6R03ZZ.
2. DEVICE TO WITHSTAND APPLIED INPUT POTENTIAL OF 300VRMS 40Hz WITHOUT DAMAGE.
3. OUTPUT LOAD IMPEDANCE=6000 OHMS.
4. SECONDARY TO TRACK PRIMARY VOLTAGE IN A LINEAR FASHION THROUGHOUT NOMINAL INPUT RANGE OF 179-266VRMS.
5. DIELECTRIC WITHSTANDING VOLTAGE: 1500VRMS
6. TERMINAL 6: NO CONNECTION.

DIMENSIONS ARE IN INCHES AND AFTER PLATING	DR		Parko ELECTRONICS COMPANY INC., SANTA ANA, CALIF.
TOLERANCES (unless otherwise specified) .X ±.1 .XX ±.03 .XXX±.010 ANGLES±0.5°	CHK		
	DSGN		TRANSFORMER
	PROJ		
	REL		
MACH SURF ✓	APPROVED	CODE IDENT NO. 13979	SIZE A	60071	REV
	APPROVED		
	DO NOT SCALE DRAWING	SCALE	SHEET OF 1

60071

TRANSFORMER

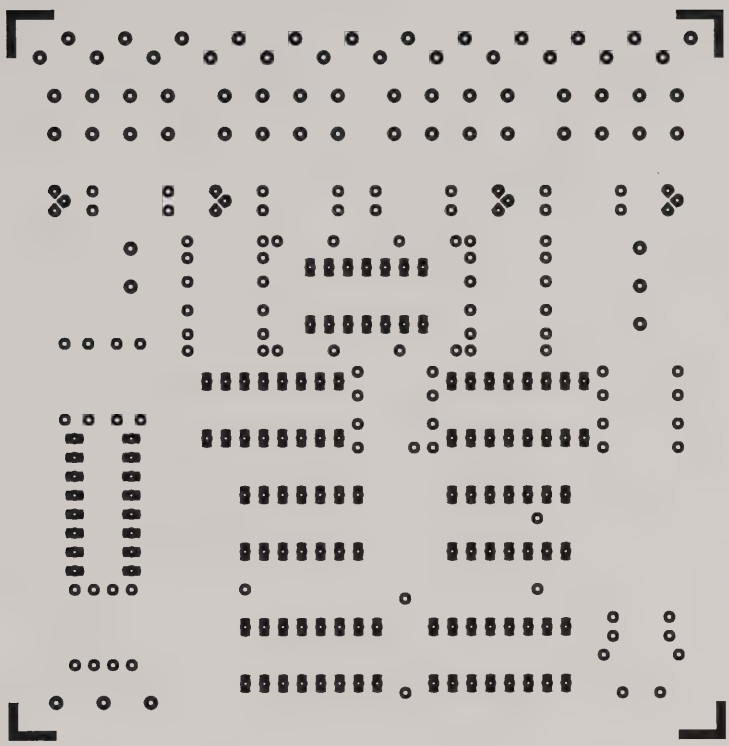

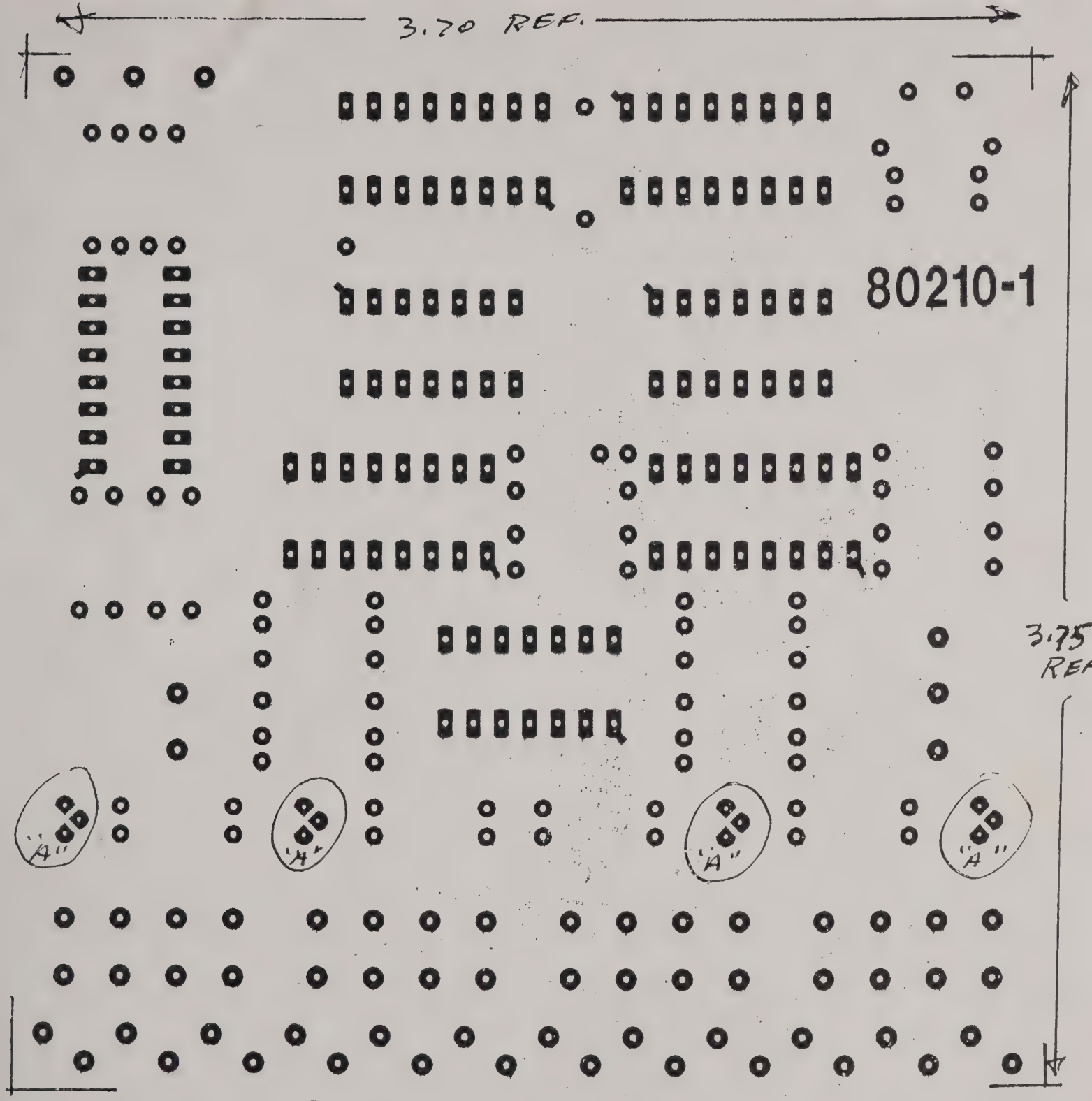

RATIO 2.5 : 1

6. HOLE DIMENSIONS AFTER PLATING.
5. DRILL ALL HOLES .035" (#65) EXCEPT AS NOTED
   "A" HOLES .025" (#72) = 12 HOLES
4. ALL HOLES PLATED THRU
3. SOLDER PLATE & FUSE ALL CIRCUITRY
2. MATERIAL .063", GLASS EPOXY, 2 OZ. COPPER CKT
1. TOP DRAWING: 101900

NOTES:

P.C. BOARD 80210-1 6/4/91

101905

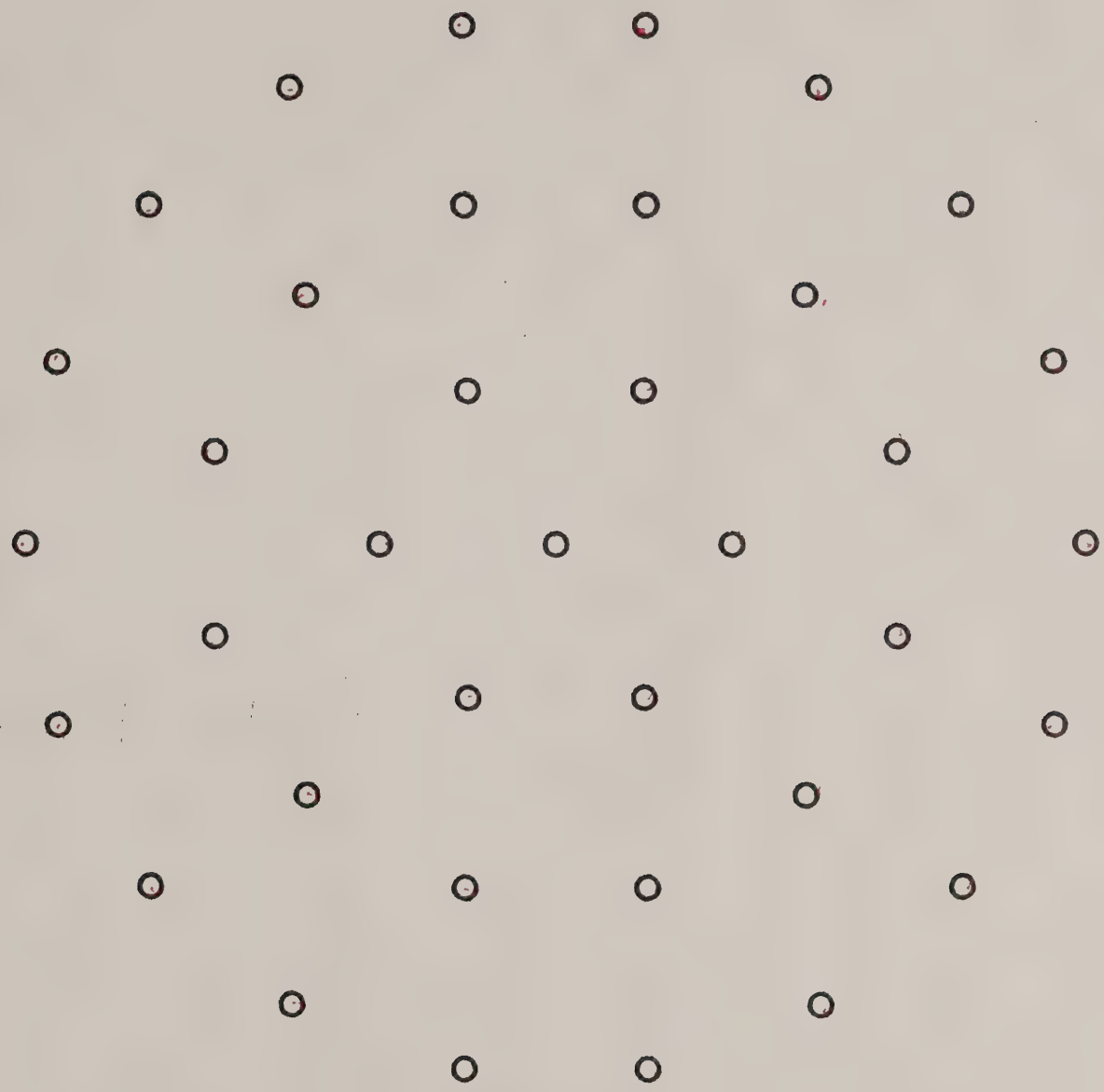

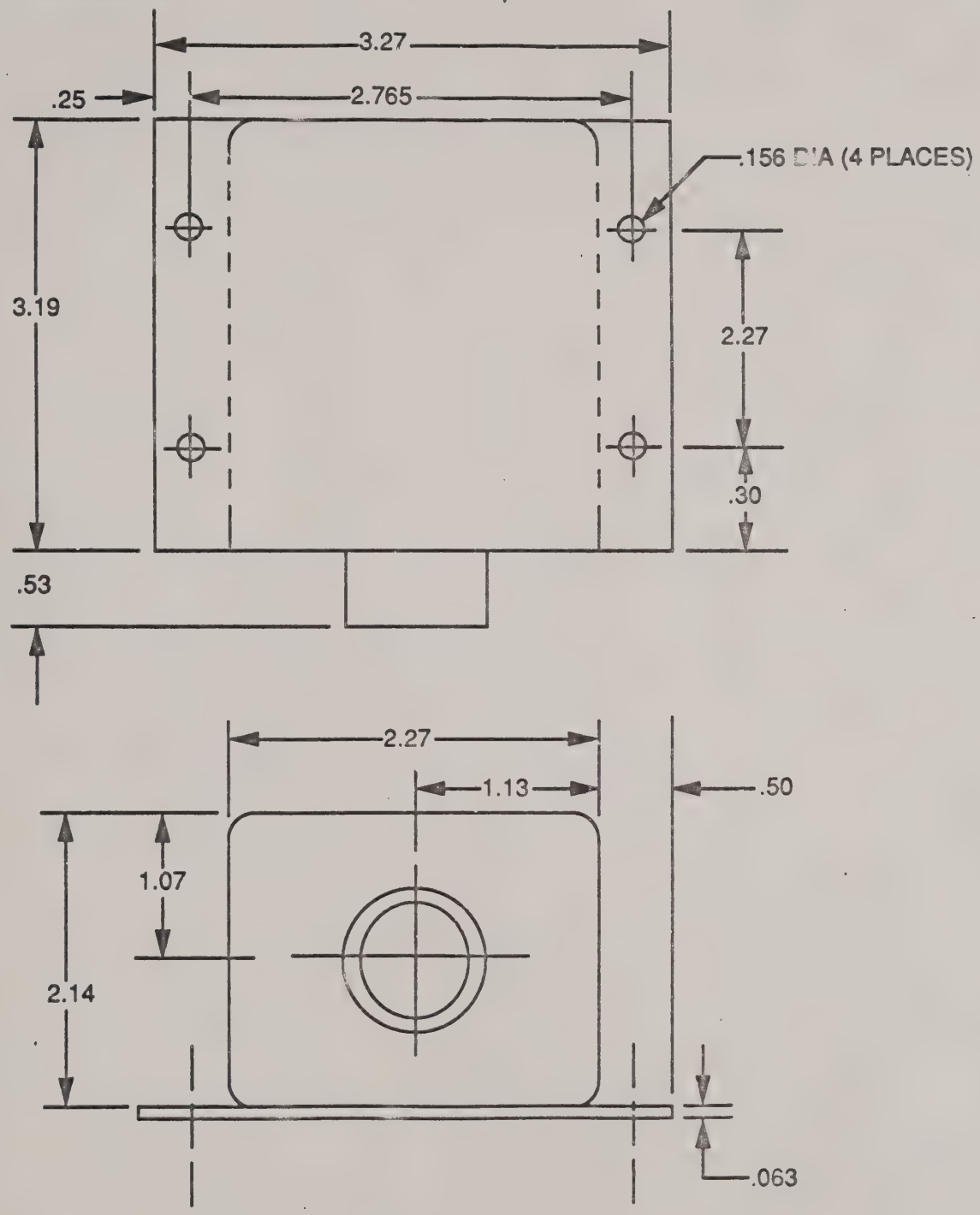

FIGURE 4 (-007)

SIZE	CAGE CODE	DRAWING NO.	
A	12436	6010663	
SCALE NONE	REV G		SHEET 27

Abbott TECHNOLOGIES, INC

45-445Hz PC POTENTIAL TRANSFORMER

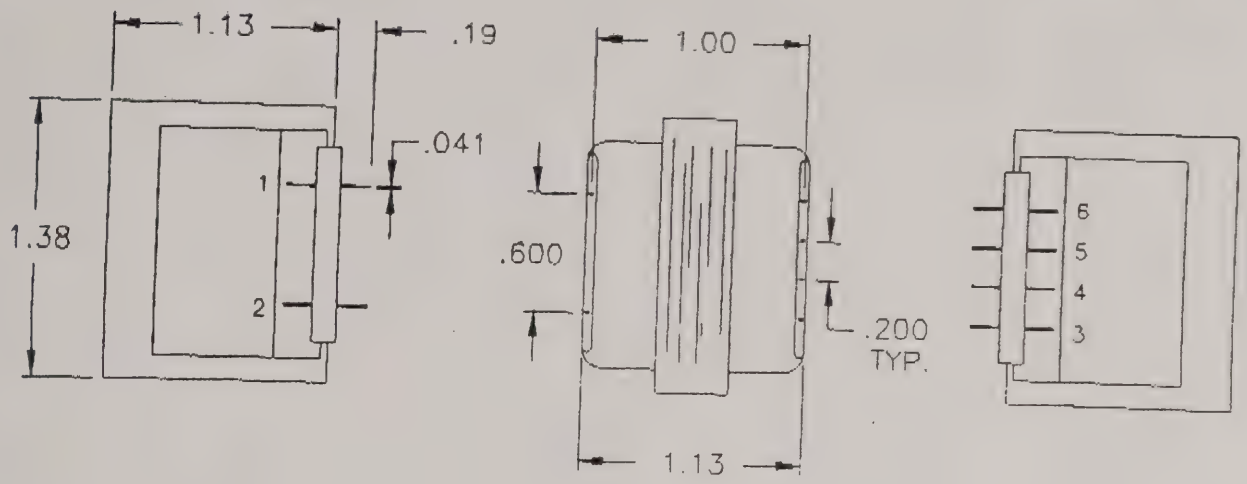

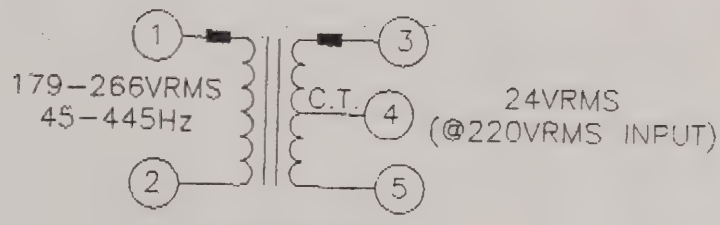

SCHEMATIC

NOTES: UNLESS OTHERWISE SPECIFIED

1. BUILT TO MEET CONSTRUCTION REQ'S OF MIL–T–27E TYPE TF6R03ZZ.
2. DEVICE TO WITHSTAND APPLIED INPUT POTENTIAL OF 300VRMS 40Hz WITHOUT DAMAGE.
3. OUTPUT LOAD IMPEDANCE≈6000 OHMS.
4. SECONDARY TO TRACK PRIMARY VOLTAGE IN A LINEAR FASHION THROUGHOUT NOMINAL INPUT RANGE OF 179–266VRMS.
5. DIELECTRIC WITHSTANDING VOLTAGE: 1500VRMS
6. TERMINAL 6: NO CONNECTION.

ISSUE	DESCRIPTION	DATE	BY
–			
Nc/1	CORRECTED T/R - ADDED NOTES	5-21-1	[illegible]

DESIGN BY: R. LIVINGSTONE DATE: 05/20/91
APPROVED BY: DATE:
DRAWN BY: C. PRADO DATE: 05/20/91
TITLE: TRANSFORMER–POTENTIAL

Abbott TECHNOLOGIES, INC
8203 VINELAND AVE.
SUN VALLEY, CA. 91352
(818) 504–0644

CADFILE NO. S10359
SCALE: NONE
TOLS: XX± .02
DWG. NO. S10359
ISSUE Nc/1

TEST XFORMER 4-20-47

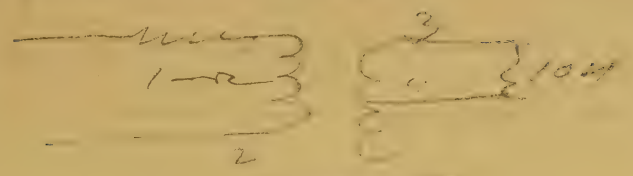

	IN	OUT
220 = 1.2044	—	23.20
250 = 1.62 MV	—	26.10
275 = 2.04	—	28.80
300 = 2.43	—	31.00

220 — 1.59	=	23.12
250 — 2.16	—	26.31
275 — 3.390	—	28.46
300 — 4.33	—	31.00

220 — 3.54	=	23.18
250 — 3.85	—	26.20
275 — 4.71	—	28.90
300 — 5.42	—	31.02

IT MAY NOT BE NECESSARY TO CHECK 100% OF NEW TRANSFORMERS BEGINNING WITH TWO OR THREE THE LOT MAY BE ACCEPTED

GWS

8-20-91

NEW TRANSFORMERS

	INPUT I	OUTPUT
60H	220 – 1.60	23.29
	250 – 1.97	26.53
	275 – 3.01	29.04
	300 – 4.00	31.65
50H		
	220 – 2.31 –	23.75
	250 – 3.72 –	26.97
	275 – 5.56 –	28.70
	300 – 7.91 –	31.19
60OHC		
	220 – 3.22 –	23.41
	250 – 3.58 –	26.56
	275 – 4.51 –	29.20
	300 – 5.13 –	31.84

#1

60H	220 – 1.83 –	23.41
	250 – 2.57 –	26.57
	275 – 3.79 –	28.15
	300 – 5.20 –	31.76
50H	220 – 2.98 –	23.38
	250 – 5.00 –	26.54
	275 – 7.62 –	28.71
	300 – 8.67 –	31.04
60OH	220 – 3.13	23.43
	250 – [illegible]	26.62
	275 – 4.48	29.31
	300 – 5.32 –	31.84

#2

NEW MOUNTAINEERS 9-20-07

		INPUT I		OUTPUT	
60 Hz	220	1.14		23.35	
	250	1.61		26.53	
	275	2.43		28.05	
	300	3.93		31.24	
50 Hz	220	2.75		23.33	F2
	250	4.77		26.45	B3
	275	7.17		28.66	
	300	9.90		31.03	
400 H	220	3.18		23.35	
	250	3.56		26.55	
	275	4.48		28.20	
	300	5.08		31.85	
60 Hz	220	1.84		23.79	
	250	2.48		26.68	
	275	3.75		28.04	F2
	30	5.58		31.62	B4
50 H	220	3.13		23.31	
	250	5.27		26.66	
	275	7.75		28.64	
	30	9.82		30.95	
400 H					
	220	3.15		23.34	
	250	3.50		26.58	
	275	4.45		28.87	
	300	5.04		31.85	

NEW XFORMERS 9-20-9[illegible]

	INPUT		OUT	
60HZ				
	220	1.50	23.38	
	250	2.09	26.56	
	275	2.79	29.12	
	300	3.82	31.67	
50HZ	220	2.34	23.35	
	250	3.71	26.80	
	275	5.48	29.80	H5
	30	3.17	31.16	
400H	220	3.16	23.34	
	250	3.54	26.62	
	275	4.47	29.26	
	30	5.12	31.81	
60HZ	220	1.59	23.31	
	250	2.42	26.69	
	275	3.77	29.00	
	300	5.12	31.65	F2
50HZ	200	2.95	23.29	
	250	4.97	[illegible]	H6
	275	7.19	28.57	
	300	10.15	31.08	
400H	220	3.15	23.32	
	250	3.52	26.54	
	275	4.50	29.[illegible]	
	300	5.06	31.34	

NEW TRANSFORMER 9-20-[illegible]

		INPUT I		OUTPUT	
60 Hz					
	220	1.56		23.33	
	250	2.33		26.52	
	275	3.48		28.07	
	300	4.85		31.64	
50 Hz	220	2.70		23.32	72
	250	4.55		26.69	
	275	6.74		28.63	47
	300	9.69		31.09	
400 Hz	220	3.15		23.36	
	250	3.52		26.55	
	275	4.47		28.22	
	300	5.08		31.83	
60 Hz	220	1.72		23.34	
	250	2.09		26.51	
	275	2.99		28.06	
	300	4.16		31.70	48
50 Hz	220	2.49		23.30	
	250	4.04		26.46	
	275	5.92		28.20	
	300	8.77		31.14	
400 Hz					
	220	3.15		23.36	
	250	3.51		26.55	
	275	4.43		28.21	
	300	5.10		31.87	

60071 XFORMERS 10-27-08

250V / 60HZ

1 - 1.35V - 25.79V - T1
2 - 1.53V - 25.75V - T2
3 - 1.42V - 25.77V - T2
4 - 1.63V - 25.78V - T2
5 - 1.53V - 25.74V - T2
6 - 1.59V - 25.75V - T2
7 - 1.15V - 25.76V - T1
8 - 2.21V - 25.73V - T2
9 - 1.00V - 25.77V - T1
10 - 2.20V - 25.75V - T2
11 - 0.98V - 25.76V - T1
12 - 1.10V - 25.78V - T1
13 - 1.16V - 25.70V - T1

2211 Martin St., Suite 108-702, Irvine, CA 92715, 714/474-1588

6 0071 XFORMERS 9-17-08

250/60Hz

1	—	2.06V	—	25.97	—	1
2	—	2.47V	—	25.90	—	2
3	—	2.65V	—	25.95	—	2
4	—	2.20V	—	25.95	—	1
5	—	2.08V	—	25.97	—	1
6	—	2.82V	—	25.97	—	2
7	—	2.42V	—	25.98	—	2
8	—	2.25V	—	25.91	—	1
9	—	2.35V	—	25.95	—	1
10	—	2.20V	—	25.97	—	1
11	—	2.36V	—	25.95	—	2
12	—	2.84V	—	25.90	—	2

PINPOINT MEDIA

101900

6-4-90

ABBOTT TRANSFORMERS — PRIMARY CURRENT CHECKED WITH A 1Ω RESISTOR IN SERIES AND 10K LOAD ON SECONDARY

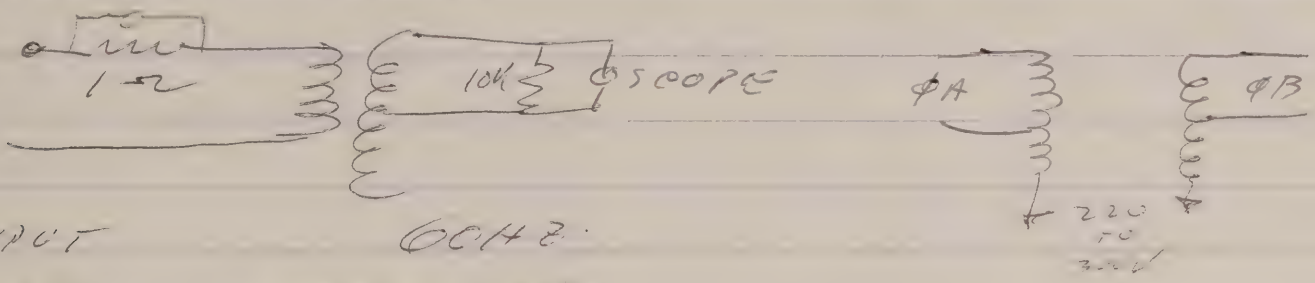

INPUT 60HZ

220V — .50 MV —
250V — .72 MV —
275V — 1.02 MV —
300V — 1.59 MV —

SINE WAVE O.K.

50HZ

220V — .85 MV —
250V — 1.54 MV —
275V — 2.47 MV —
300V — 3.82 MV —

SINE WAVE O.K.

45HZ:

220V — 1.36 MV —
250V — 2.66 MV —

SINE O.K.

275V — 3.69 MV —
300V — 5.17 MV —

SOME DISTORTION

40HZ:

220V — 2.51 MV — SINE O.K.
250V — 3.88 MV — SOME DISTORTION
275V — 5.52 MV — → DISTORTION
300V — 6.58 MV — MORE DISTORTION

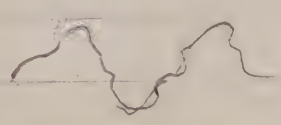

6-1-91

101900

CHECK TRANSFORMERS PER
T.F. BEFORE INSTALLING

MEASURE PRIMARY SATURATION
CURRENT AT 40HZ - 60HZ.
WITH INPUT ~~AT~~ UP TO 300VRMS
AND 12V SECONDARY LOADED
WITH 10 Ω.

TOO MUCH
LOAD ON
P.O.R. SUP.

MAY POT ALL EXCEPT
ONE UNIT IF EVERYTHING
SEEMS O.K.
DO ONE ONLY FIRST

220 INPUT 7544 UNLOADED

140MV / 7 OHM 20MV/TURN

		Ω	mH/T
PRIMARY	11,000	2260	.205 / T
SEC	1,272	360	.283 / T

$B = \approx 15{,}000$ GAUS.

(ARMWOOD)

$\frac{V}{T} = 4.44 \times 15 \times .95 \times 40 \times 10^{-5} = .024$ VOLTS/TURN

AT 300V = 12500 TURNS.

E_1	E_2	E_3
220	- 25.44	.140

$$\frac{E_3}{E_1} \quad \frac{.14}{220} = .000636$$

$$\frac{E_2}{E_1} \quad \frac{25.44}{220} = .1156$$

E_1 220

E_2 25.44

E_3 .14

$$PRI \quad \frac{7}{PRIM} = .000636 = 11006.28 \text{ TURNS}$$

$$\frac{SEC}{11006} = .1156 = 1272$$

SEC

7 TURNS = 140 MV

PRI = 220

SEC = 25,440

PRI $\frac{220000}{20} = 11000$ TURNS

$\frac{140}{7} = 20$ M/TURN

SEC $\frac{25440}{20} = 1272$ TURNS

		255V 50	60	400	OUT
T1	1	2.70 mV	1.25 mV	0.31 mV	29 V
T2	2	3.20 mV	1.45 mV	0.31 mV	29.5 V
T2	3	2.96 mV	1.33 mV	0.32 mV	29.5 V
T1	4	2.75 mV	1.27 mV	0.31 mV	29.5 V
T1	5	2.54 mV	1.21 mV	0.23 mV	28 V
T1	6	2.62 mV	1.23 mV	0.31 mV	29.5 V
T1	7	2.34 mV	1.14 mV	0.31 mV	29.5 V
T1	8	2.85 mV	1.29 mV	0.32 mV	29.5 V
T2	9	2.90 mV	1.32 mV	0.30 mV	29.5 V
T2	10	3.49 mV	1.54 mV	0.31 mV	29.5 V
T2	11	3.34 mV	1.44 mV	0.32 mV	29.5 V
T2	12	2.94 mV	1.32 mV	0.32 mV	29.5 V
T2	13	2.96 mV	1.32 mV	0.32 mV	29.5 V
T1	14	2.73 mV	1.28 mV	0.31 mV	29.5 V

WAVE SHAPE O.K – NO DISTORTION

12-5-06

T21 — 3.63
T22 — 2.30
T13 — 1.68
T14 — 1.77
T15 — 1.88
T26 — 4.60
T27 — 2.21
T28 — 2.39
T19 — 1.70
T110 — 2.00
T111 — 2.01

RODON 60071 3-10-04

PRIMARY SATURATION TEST AT OUTPUT

INPUT = 275VAC 50 HZ – 60 HZ – 400HZ –

1	–	T2	7.71 MV	3.64MV		29.29
2	–	T1	5.35MV	2.64MV	0.41MV	28.40
3	–	T2	8.10 MV	4.35MV		29.15
4	–	T1	6.04MV	2.60MV		29.20
5	–	T2	6.52MV	2.79MV		29.08
6	–	T1	5.81MV	2.46MV		29.09
7	–	T1	5.46MV	2.69MV		29.11
8	–	T1	5.74MV	2.77MV		29.15
9	–	T1	5.34MV	2.45MV		29.15
10	–	T2	9.97MV	4.30MV	– 1.35MV –	29.08
11	–	T1	5.75MV	2.48MV		29.10
12	–	T1	5.73MV	2.53MV		29.09
13	–	T2	8.75MV	3.75MV		29.10
14	–	T1	5.63MV	2.47 MV		29.13
15	–	T2	7.09MV	3.03MV		29.08
16	–	T2	7.89MV	3.65MV		29.07
17	–	T2	10.03MV	4.58MV	0.41	29.07
18	–	T1	5.22MV	2.25MV	0.40MV	29.10
19	–	T1	5.73MV	2.46MV		29.09
20	–	T2	8.30MV	3.67MV		29.08
21	–	T1	5.37MV	2.25MV		29.16
22	–	T2	6.27MV	2.75MV		29.10
23	–	T2	7.20MV	3.08MV		29.10
24	–	T1	5.28MV	2.36MV		29.10
25	–	T1	5.25MV	2.21MV	0.40	29.09

RODON 60071 11-13-02

INPUT=275V / SATURATION VOLT. SECONDARY

		50Hz	60Hz	400Hz	
1	T1	5.94	2.40V	0.36V	29.5V
2	T1	6.11V	2.31V	0.37V	29.5
3	T1	6.19V	2.49V	0.36V	29.5V
4	T2	9.26V	3.75V	0.36V	29.4V
5	T1	6.00V	2.38V	0.36V	29.5V
6	T1	5.89V	2.24V	0.35V	29.5V
7	T2	6.75V	2.70V	0.36V	29.5V
8	T1	6.24V	2.42V	0.35V	29.5V
9	T1	6.30V	2.46V	0.39V	29.5V
10	T2	6.79V	2.73V	0.36V	29.5V
11	T1	6.00V	2.33V	0.36V	29.5V
12	T1	6.18V	2.44V	0.37V	29.5V
13	T2	6.69V	2.48V	0.35V	29.5V
14	T2	8.75V	3.37V	0.37V	29.42V
15	T2	6.83V	2.61	0.37V	29.52V

T2 ONLY USED AS "T2"

T1 CAN BE USED AS "T1" OR "T2"

RODON 60071 10-6-01
CHECKED AT 50HZ - 275 VAC

	SAT-	OUTPUT	
#1	7.00 mv	28.96	T2
2	6.37 mv	28.97	T1
3	7.79 mv	28.96	T2
4	6.99 mv	28.97	T1
5	7.13 mv	28.99	T2
6	6.48 mv	28.94	T1
7	6.46 mv	29.02	T1
8	6.83 mv	29.00	T
9	6.94 mv	28.99	T1
10	7.95 mv	28.97	T2
11	6.79 mv	28.99	T1

SHAKE
(13.71) (28.60) T2

11-19-01

[illegible] 60Hz 120VAC

	50 Hz	60 Hz	400 Hz	
1 —	4.05 mV	1.66 mV	.256 mV	T1
2 —	4.06 "	1.78 "	.292 "	T1
3 —	3.59 "	1.58 "	.283 "	T1
4 —	3.88 "	1.72 "	.299 "	T1
5 —	3.83 "	1.64 "	.286 "	T1
6 —	5.42 "	2.20 "	.304 "	T2
7 —	4.29 "	1.74 "	.288 "	T2
8 —	4.91 "	1.99 "	.307 "	T2
9 —	4.29 "	1.79 "	.291 "	T2
10 —	4.22 "	1.81 "	.310 "	T2
11 —	4.14 "	1.71 "	.293 "	T1
12 —	3.45 "	1.50 "	.304 "	T1
13 —	4.09 "	1.78 "	.294 "	T1
14 —	N.G. OPEN PRIMARY			
14 —	4.85 "	1.88 "	.258 "	T2

PAGE-1 RUDOW 60071 XFORMERS 9-12-2000

IN	SAT.	OUT	WAVE FORM
	50HZ		
220	1.785	23.18	O.K.
250	3.255	26.30	O.K
275	4.94	28.93	O.K (X)
	60HZ		
220	0.750	23.21	O.K #1
250	1.372	26.36	O.K
275	2.125	29.03	O.K
	400HZ		
220	0.134	23.29	O.K
250	0.203	26.42	O.K
275	0.285	29.08	O.K

	50HZ		
220	1.88	23.32	O.K
250	3.37	26.35	O.K
275	5.09	28.47	O.K (B)
	60HZ		
220	0.147	23.22	O.K
250	1.402	26.37	O.K #2
275	2.151	29.02	O.K
	400HZ		
220	0.148	23.66	O.K
250	0.216	26.46	O.K
275	0.298	29.10	O.K

PAGE 2

IN	SAT -	OUT -	WAVE	
	50 KB			
220 -	1.872	- 23.23	- 0.4	
250 -	3.457	- 26.35	- 0.4	#3
275 -	5.216	- 29.01	- 0.4 ⊙	
	60 KB			
220 -	0.737	- 23.23	- 0.4	
250 -	1.434	- 26.38	- 0.4	
275 -	2.243	- 29.03	- 0.4	
	50 KB			
220 -	5.04	- 23.09	- 0.4	
250 -	9.186	- 26.22	- 0.4	#4
275 -	12.820	- 28.73	- 0.4 ⊙	
	60 KB			
220 -	1.635	- 23.12	- 0.4	
250	3.607	- 26.28	- 0.4	
275	6.001	- 28.86	- 0.4	
	50 KB			
220 -	1.507	- 23.21	- 0.4	
250 -	2.729	- 26.37	- 0.4	#5
275 -	4.195	- 28.99	- 0.4 ⊙	
	60 KB			
220 -	0.680	- 23.23	- 0.4	
250 -	1.140	- 26.38	- 0.4	
275 -	1.780	- 29.05	- 0.4	

CHECKED AT 50HZ ONLY

	IN	OUT		
✓ 1	4.94	28.93		F2
✓ 2	5.09	28.87		F2
✓ 3	5.21	29.01		F2
4	12.82	28.73		F2
✓ 5	4.19	28.99	✓	F1
✓ 6	5.30	28.97		F2
7	4.73	28.99	✓	F1
8	4.43	29.00	✓	F1
✓ 9	4.84	28.99	✓	F1
✓ 10	6.08	28.96		F2
✓ 11	4.72	28.97	✓	F1
✓ 12	5.75	28.87		F2
✓ 13	4.64	28.99	✓	F1
✓ 14	5.43	28.98		F2
15	9.17	28.39		F2
16	9.40	28.91		F2
✓ 17	4.88	28.99		F2
✓ 18	4.37	29.00	✓	F1
✓ 19	4.44	28.99	✓	F1
✓ 20	4.14	28.95	✓	F1

RODON 60071 XFORMER CERT-5-95

IN	SAT.	OUT	SCOPE
		50 HZ	
220	1.39 mV	23.5 VAC	0.4
250	2.42 mV	26.5 "	0.4
275	3.62 mV	29 V "	0.4
		60 HZ	#1
220	0.749 mV	23.5 V	0.4
250	1.140 "	26.5	0.4
275	1.643 "	29.0	0.4
		400 HZ	
220	0.115 mV	23.5	0.4
250	0.184 mV	26.5	0.4
275	0.272 mV	29.5	0.4
		50 HZ	
220	1.608 mV	23.25	0.4
250	2.62 mV	26.0	0.4
275	4.12 mV	29.0V	0.4
		60 HZ	#2
220	0.839 mV	23.25	0.4
250	1.306 mV	26.5	0.4
275	1.869	29.0V	0.4
		400 HZ	
220	0.137	23.5	0.4
250	0.210	26.5	0.4
275	0.290	29.0	0.4

CHECKED ONLY AT 50HZ AND 275VAC IN

SAT. ONLY

#3	3.930 mV	T1		1 – 3.62mV	T1
4	3.417 "	T2	✓	2 – 4.17mV	T2
5	4.730 "	T2			
6	5.510 "	T2			
7	4.265 "	T2			
8	3.999 "	T2	✓		
9	3.947 "	T2	✓		
10	4.043 "	T2	✓		
11	3.800 "	T2	✓		
12	4.065 "	T2			
13	3.710 "	T2	✓		
14	4.571 "	T2			
15	3.941 "	T2	✓		
16	3.131 "	T1	✓		
17	3.056 "	T1	✓		
18	4.312 "	T2	✓		
19	3.403 "	T1	✓		
20	3.323 "	T1	✓		
21	3.234 "	T1	✓		
22	3.145 "	T1	✓		
23	3.318 "	T1	✓		
24	2.996 "	T1	✓		
25	3.146 "	T1	✓		

(7-8-97)

(1-13-97)

PAGE #1

SEPT-18-96

RODON TRANSFORMERS
60071

#1

IN	SAT -	OUT -	PICT.
	400 HZ		
220	0.187 MV	23+V —	CLEAN
250	0.267 MV	27V —	"
275	0.359 MV	29 - —	"
	60 HZ		
220	1.33 MV	- 23+ —	"
250	2.85 MV	- 26.5 —	"
275	5.12 MV	- 29 —	"
	50 HZ		
220	4.373	— 23 - —	"
250	5.24	— 26.5 —	"
275	11.67	— 29.0 —	"

#2

	50 HZ ONLY		
220	4.22	- 23.+	"
250	8.24	- 26.5	"
275	11.81	- 29.0	"

#3 ✓ +1

220	3.47	- 23.5	"
250	6.48	- 26.5	"
275	9.29	- 29.0	"

#4 ✓

220	3.55	- 23.5	"
250	6.41	- 26.5	"
275	9.39	- 29.0	"

SATURATION
CHECKED AT 275V IN AND 50HZ ONLY

#5	9.80 mV	✓	T1
6	11.04 mV	✓	
7	10.06 mV	✓	
8	14.28 mV		
9	13.78 mV		
10	14.70 mV		
11	15.45 mV		
12	10.67 mV	✓	
13	12.08 mV		x
14	13.33 mV		
15	16.30 mV		
16	8.91 mV	✓	
17	12.00 mV		x
18	10.19 mV	✓	
19	11.98 mV		x
20	11.47 mV		x
21	14.64 mV		
22	15.23 mV		
23	12.01 mV		x
24	10.13 mV	✓	
25	14.93 mV		

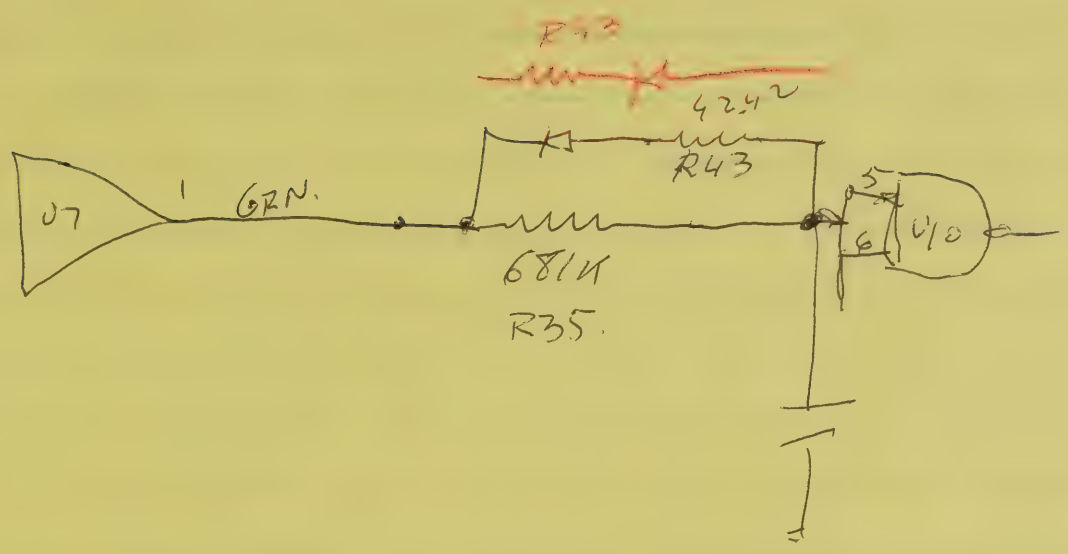
R42
42.4Ω
R43
U7
1
GRN.
5
6
U10
681K
R35.

11-14-02

CHANGE R1 TO 150 Ω TO
ACCOMODATE CHANGING C1 TO
35V INSTEAD OF 50V.

REGULATION DOWN TO 14.7V

C1 VOUT AT 32V = 28.2.

REGISTER/AD, INCORPORATED

2646 Dupont Drive, Suite 20-401, Irvine, CA 92715 Bus:(714)474-2916 FAX: 714-474-1931

	N.C.	N.O
VD1 -	207MV	211MV
	215MV	206MV
VD2 -	214MV	209MV
	210MV	207MV
FD1 -	217MV	256MV
	218MV	219MV
FD2 -	205MV	209MV
	217MV	241MV

JUNE - 1 - 92

DROP MEASURED WITHIN TEST SET UP -

TEST SET-UP ONLY HAD ABOUT 130MV AVERAGE -

CONTACTS ABOUT LESS THAN 100V

101 900 SERIES

3 RELAYS ON VD1, VD2 & FD1 OR FD2

AT 28V AND NOMINAL SENSING POWER - DC CURRENT = 140 MA

46 HZ 16 µs

PERIOD 21,739

$\frac{1}{1360} \times 16 = 21{,}760 = .09\%$

~~1,024~~	16,384	K
~~256~~	4,096	I
~~64~~	1,024	G
~~16~~	256	E
~~1360~~	21760	

---

67 HZ 16 µs

PERIOD 14,925

$\frac{1}{932} \times 16 = 14912 = .08\%$

~~512~~	8,192	J
~~256~~	4,096	I
~~128~~	2,048	H
~~32~~	512	F
~~4~~	64	C
932	14912	

50/60 Hz

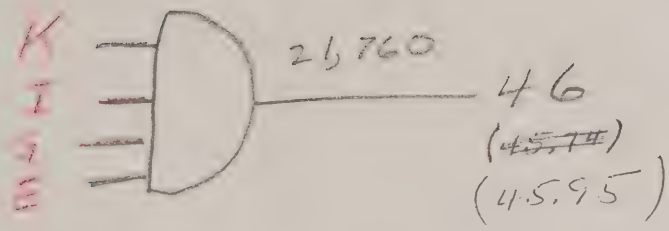

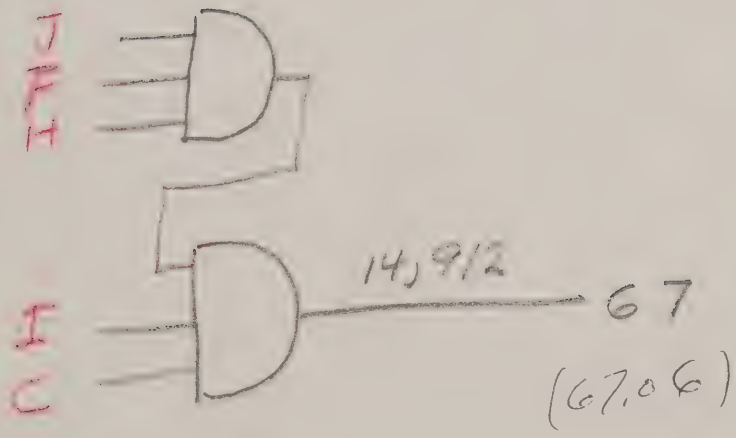

359 HZ (356) 16μS

PERIOD 2,785.5

÷ 174 x16 = 2,784 = .05%

128	2,048
32	512
8	128
4	64
2	32
174	2,784

---

441 HZ (444) 16μS

PERIOD 2,267.5

÷ 142 x16 = 2,272 = .19%

128	2,048
8	128
4	64
2	32
142	2,272

40011 2

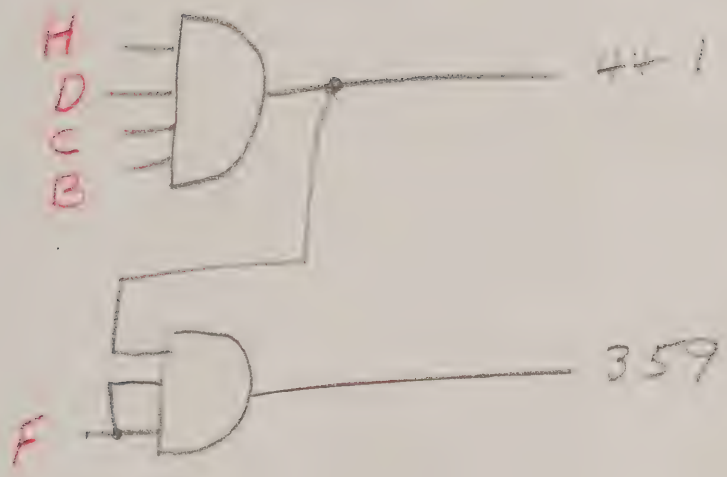

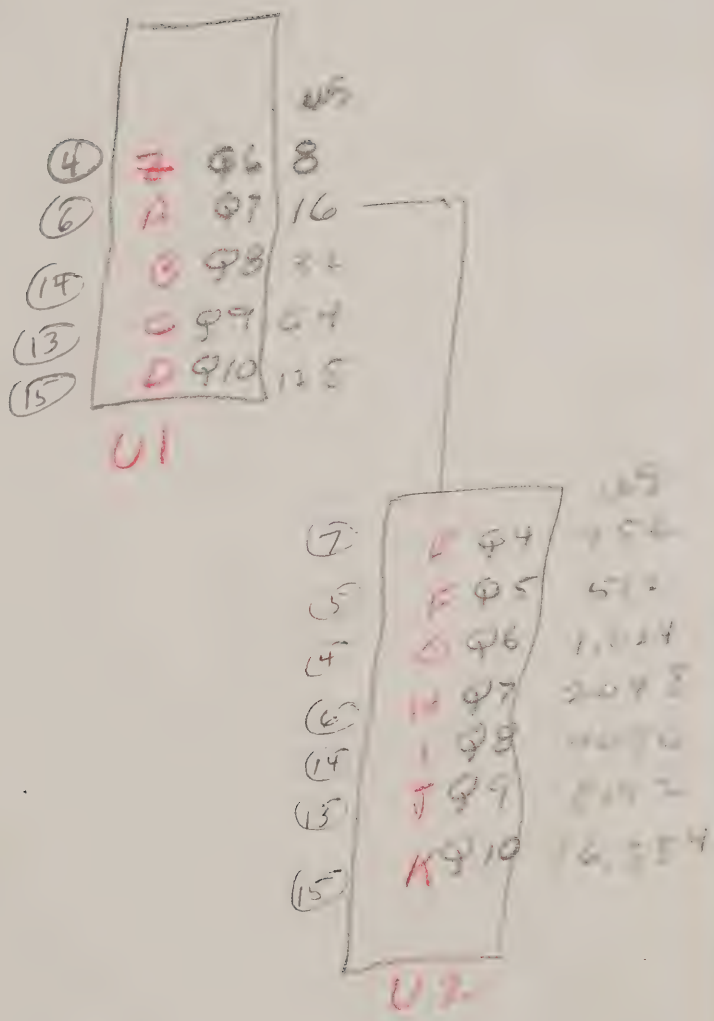

3/3 4073 (6-164)

2/4 4082 (6-173)

356
2809

2048 H
128 D
64 C

512 F
32 B

2784
18 RESET

2802

356.9

NEWORK
MRD 22 "B"

PROTOTYPE = CARTS
BOARD
12-20-81

444

2252.25

2048 H
128 D
64 C

2240
15 ROSSET

2258

442.5

PROTOTYPE CHUTE ENGINE
6-28-71
12 CHUTE

(CONT'T
MEMO V 32 "B"

MODIFY BOARD

444 3 INPUT

2252.25

2048 H
128 D
64 C

2240
14.25

2254.25

443.6 0.1%

RESET
14.25

CHANGE
BOARD

FOR PRODUCTION - 6.2081

MODIFY BOOK D

356 4 INPUT

2808.98

2254.25 .449

512 F

32 B

8 Z

2806.25

356.35 0.170

CHANGE BOOK D

3

FOR PROGRAM 6-22-71

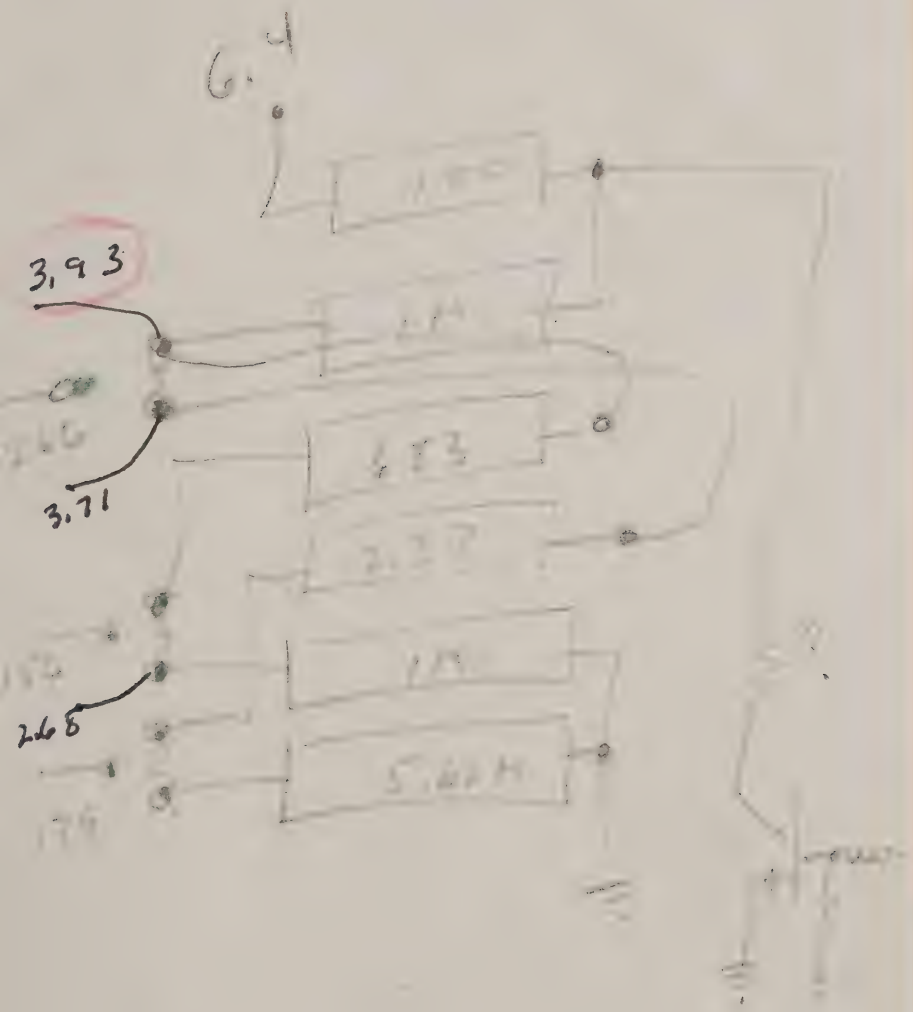
3.93
3.71
2.68

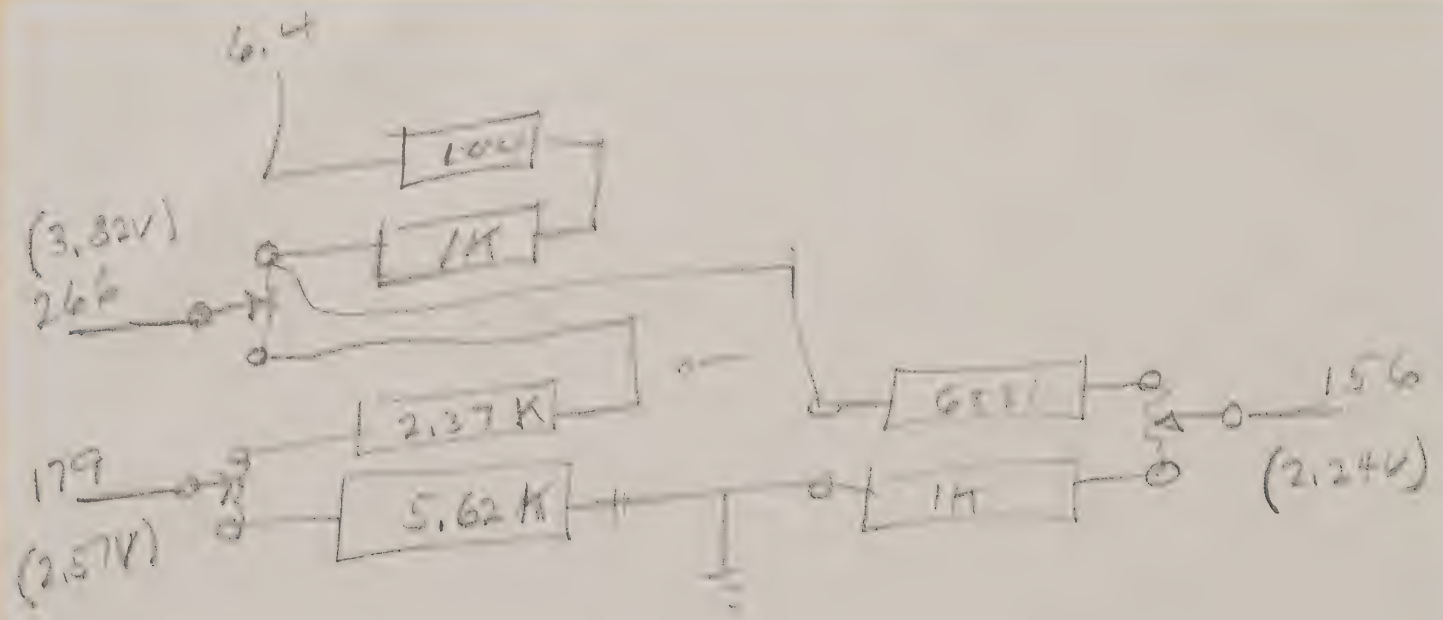
6.4
100
(3.82V)
1K
246
2.37K
179
(2.57V)
5.62K
1K
156
(2.24V)

V.02

[illegible]

133 179

15p

[illegible] RATIO = 29.73

---

15 / [illegible] = 2.24 VOLTS

2.24

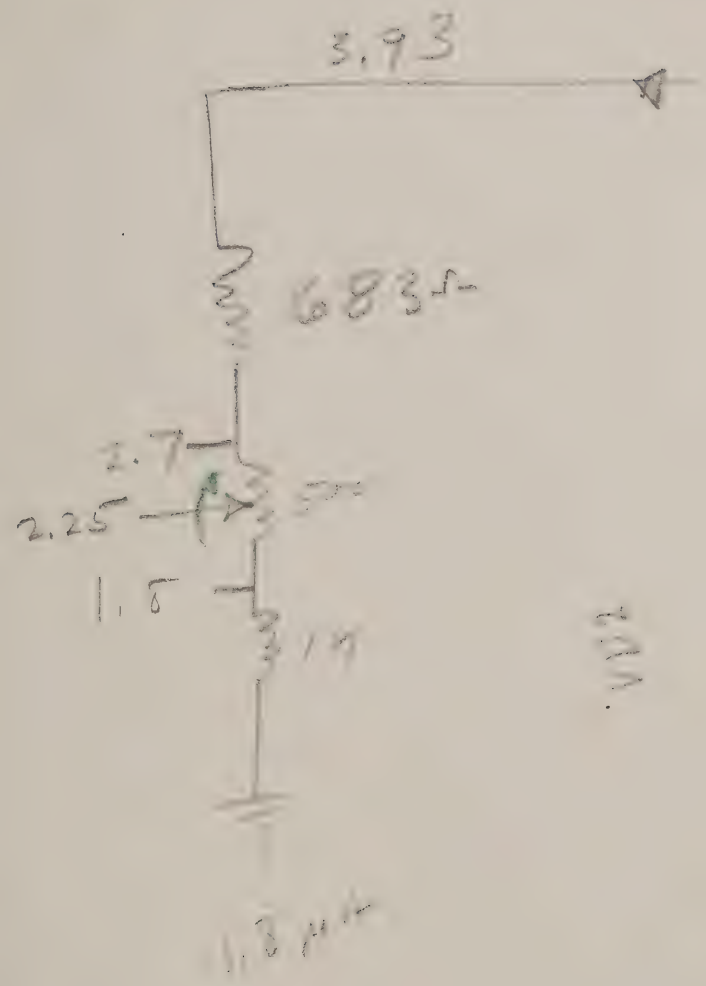
3.93
683Ω
2.7
2.25
1.5
1.8 μA

1.8 + .438 = 2.238

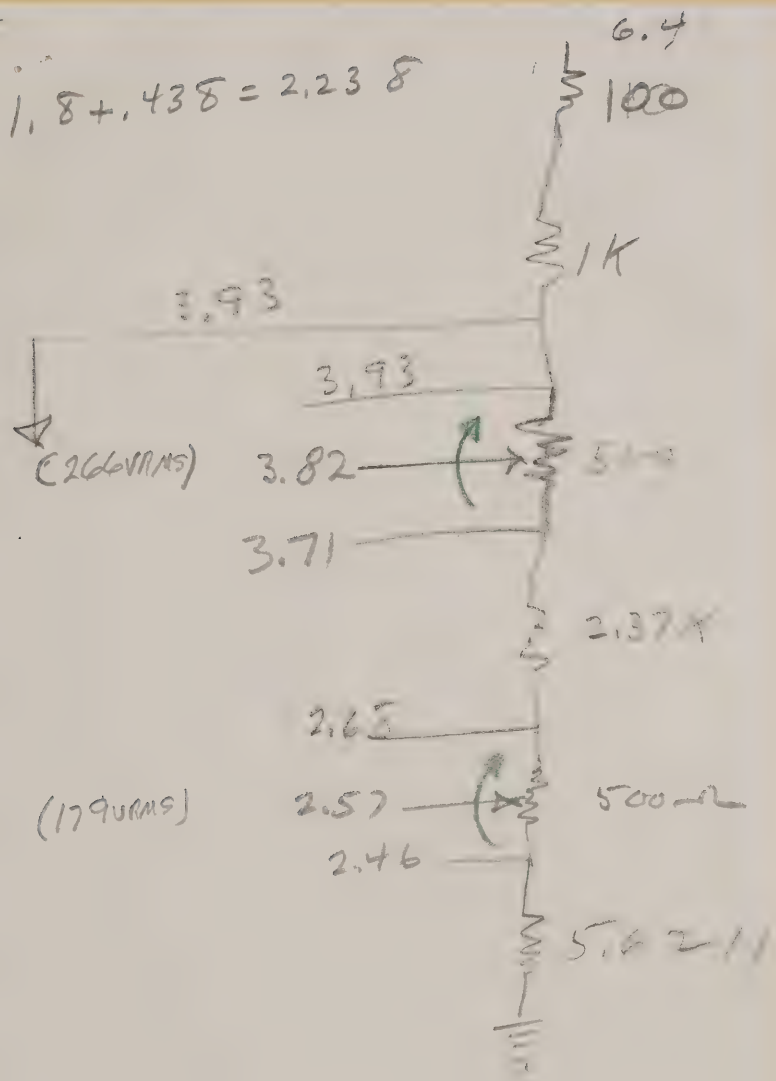

VDL

I = .438

VD 1

179 L 222.5 CTR 266 H

SET TO 3.2V

RATIO 69.53

179 = 2.57

222.5 = 3.20

266 = 3.82

INPUT

SET FILTER TO 3.200 VDC WITH 222.5 INPUT

.7635
1977

TRANSFORMER CHECK
OUT OF FILTER
SET UP A 222.5 = 3.2 VDC

---

60 HZ

		RATIO
268	3.897	68.77
222.5	3.208	69.35
177	2.523	70.15

---

400 HZ

268	3.896
222.5	3.210
177	2.521

RECHECKED R22

TRANSFORMER

220 VRMS = 24 VRMS

60071

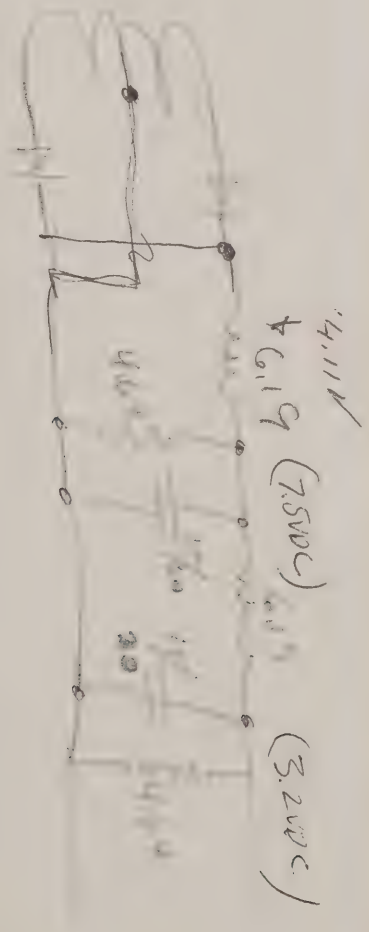

96.04 IN = 3.805 VDC. (400)

96.33 IN = 3.798 VDC. (60)

64.61 IN = 2.535 VDC. (400)

64.81 IN = 2.532 VDC. (60)

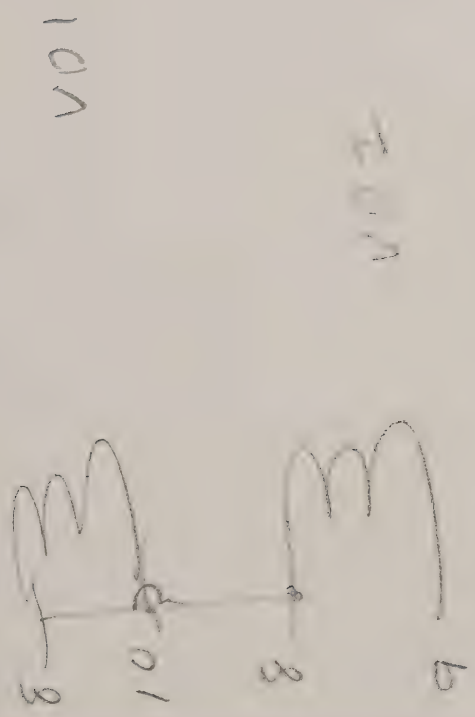

266 = 80.17 (400)

266 = 80.41 (60)

80.17 x 1.198 = 96.04 (400)

80.41 x 1.198 = 96.33 (60)

80.17 x 0.806 = 64.61 (400)

80.41 x 0.806 = 64.81 (60)

CONNECTOR WIRING

8 =	BRN		
9 -	RED	6 in 22 ga	
10 -	ORA	Blue	5.8
11 -	YELL	Violet	Black
12 -	GRN	Gray	White - yellow
13 -	CASE GND	White	
14 -	BLU	White Red	5.5
15 -	VIOLET	" Orange	White Black
16	GRY	Green	Orange White
17 -	WHI	Blue	yellow
18 -	BLK	White Violet	Green
19 -	WHI/BRN	5.7 White Brown	Violet
20 -	WHI/RED	White Gray	Gray White
21 -	WHI/ORA	Brown White	
22 -	WHI/YELL	Red	
23 -	WHI/GRN	Blue	
24 -	WHI/BLU	Black white	
25 -	WHI/VIO	Red Brown	
26 -	WHI/GRY		
27 -	WHI/BLK		
28 -	BRN/WHI		
29 -	RED/WHI		
30 -	ORA/WHI		
31 -	YEL/WHI		
32 -	GRN/WHI		
33 -	BLU/WHI		
34 -	VIO/WHI	36 BLK/WHI	
35 -	GRY/WHI	37 - BRN/RED	

FEB-10-93

101905
CHANGE PARTS LIST
WHEN USING REPON
TRANSFORMERS.

R6, R7, R11 & R12 TO
10K

R18 TO 34.8K.

---

7 UNITS OF S.O-5132
WERE CHANGED

Quik PRINT® PRINTING
2222 Michelson Dr.
Suite 236
476-9448
Free Pick Up
And Delivery

FEB - 10 - 93

REF S.O. 5132

WITH RUDON
TRANSFORMERS
R6, R7, R11 & R12
WERE CHANGED
TO 10K.

R18 CHANGED TO
34.8K

TOTAL OF SEVEN
UNITS.

	250
40	5.3 MV
45	3.5
50	2.40
60	1.33

TEST RESULTS
OF 1-10-94

Martin St., Suite 108-702, Irvine, CA 92715, 714/474-1588

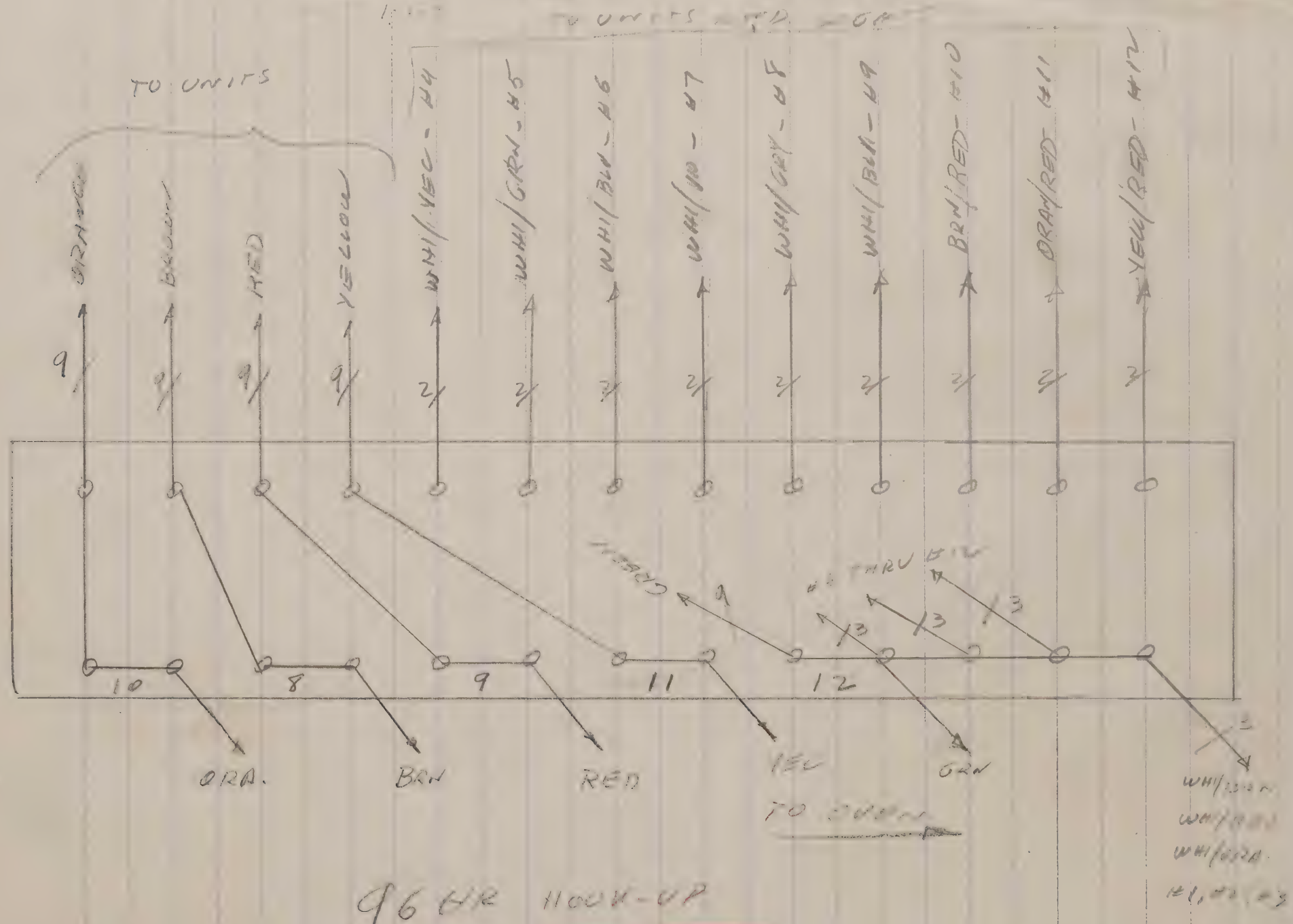
TO UNITS
ORANGE
BROWN
RED
YELLOW
WHI/VIOL - #4
WHI/GRN - #5
WHI/BLU - #6
WHI/ORG - #7
WHI/GRY - #8
WHI/BLK - #9
BRN/RED - #10
ORAN/RED - #11
YEL/RED - #12
9
2
10
8
9
11
12
ORA.
BRN
RED
VIOL
GRN
TO OVEN

96 HR HOOK-UP

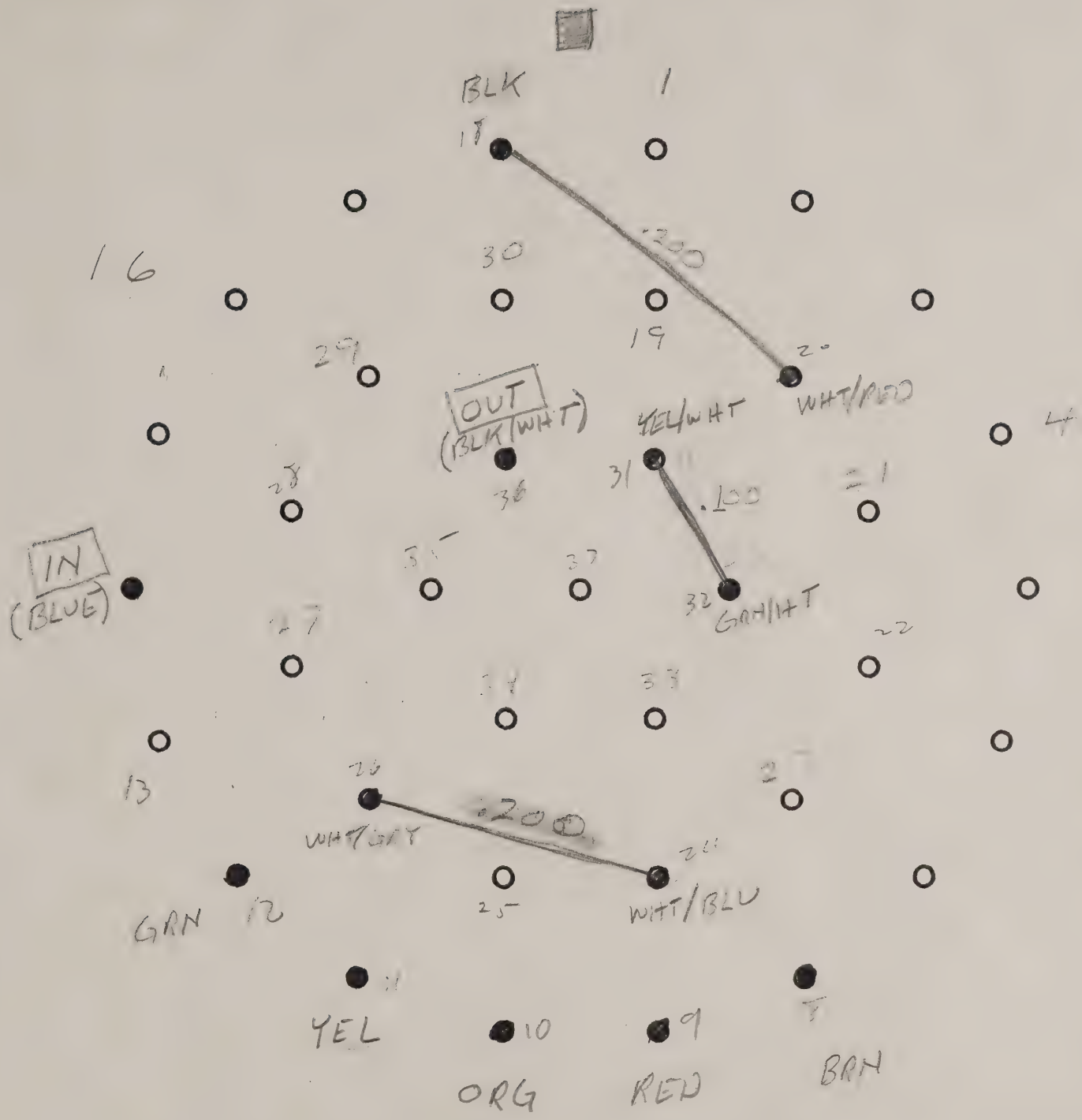

BURN IN

MOULDED CONNECTORS

FRONT

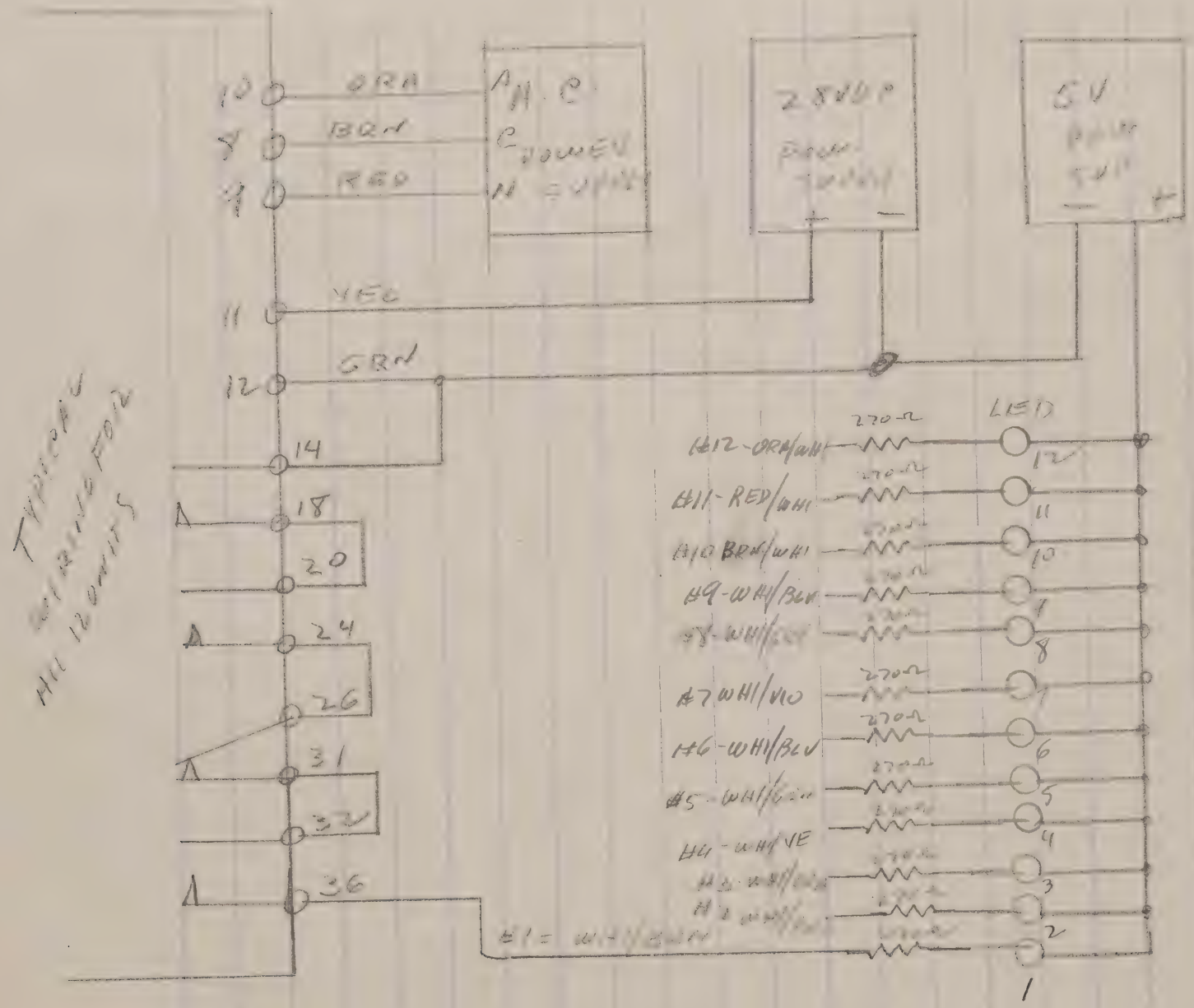

96 HD BOARD IN CONNECTED.

A

Z U4-9

A (10 U2)

B U4-10

C U5-8, U5-11

D U5-1

E U4-3

F U5-3, U4-12

G U4-2

H U5-4, U5-2

I U4-4, U5-12 (U3-4)

J U5-5

K U4-5

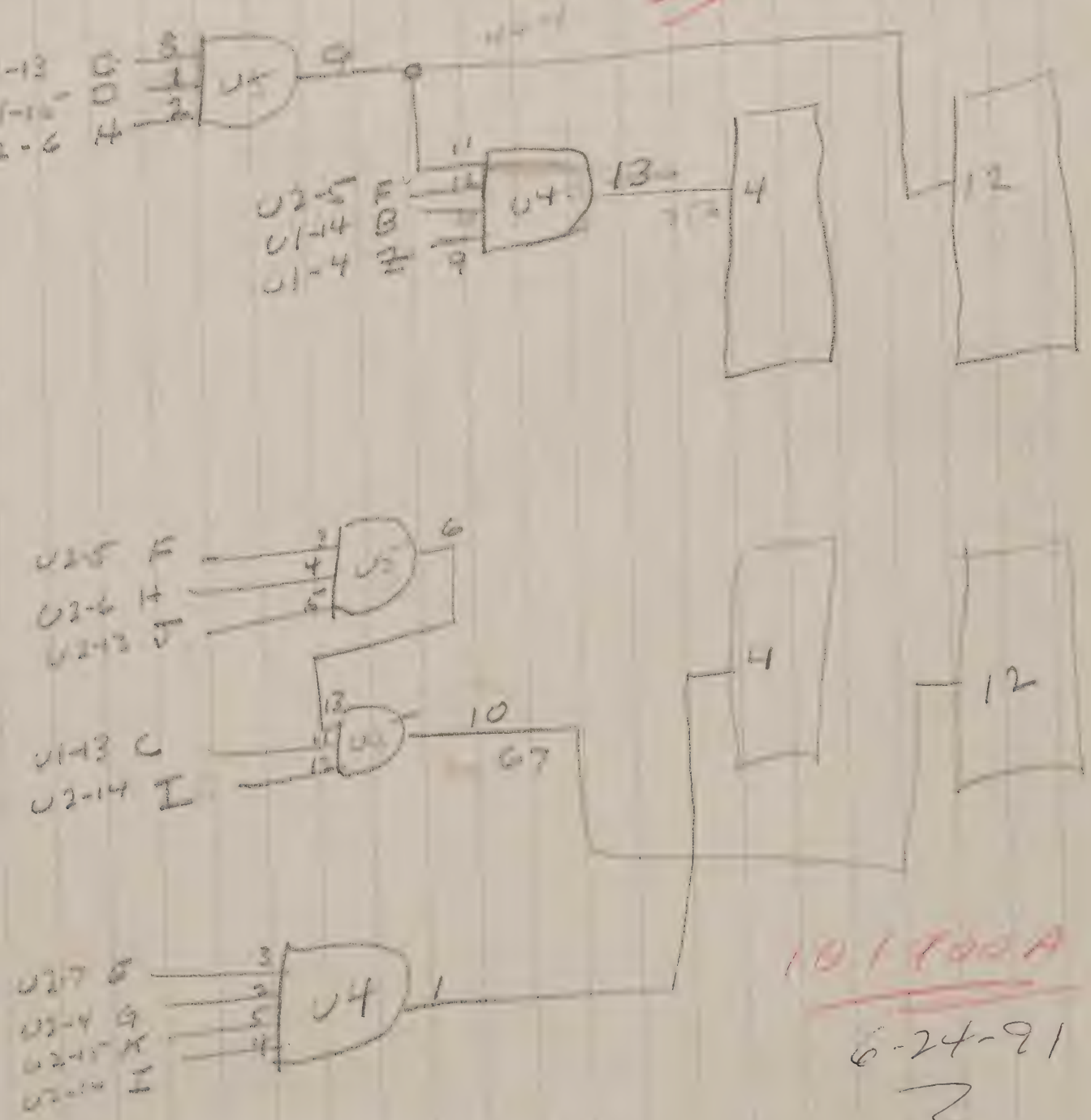

10 / 1000 A

6-24-91

3

15 mA

6-24-41

442.9 – 445.1
355.1 – 356.9 .25%

R5 = 14.74 R~55 442.5 357.2 .35%
P.W = 20.4 μs.
400HZ FREQ. TRIP = 443.0 HZ 357.3 HZ

19.6 μs (15H) – 442.8 – 357.1 ✓ 66.95 HZ 46.00 HZ
20.2 μs. 442.7 – 357.1 ✓ 66.96 46.05 HZ
19.2 μs 443.0 – 357.2 ✓
19.6 μs. 442.9 – 357.2 ✓
19.4 μs. 442.8 – 357.1 ✓
19.3 μs 442.9 – 357.2 ✓
19.4 μs 442.9 – 357.2 ✓

16

WITH 16.24
* 20.7 μs. 442.6 HZ – 356.9

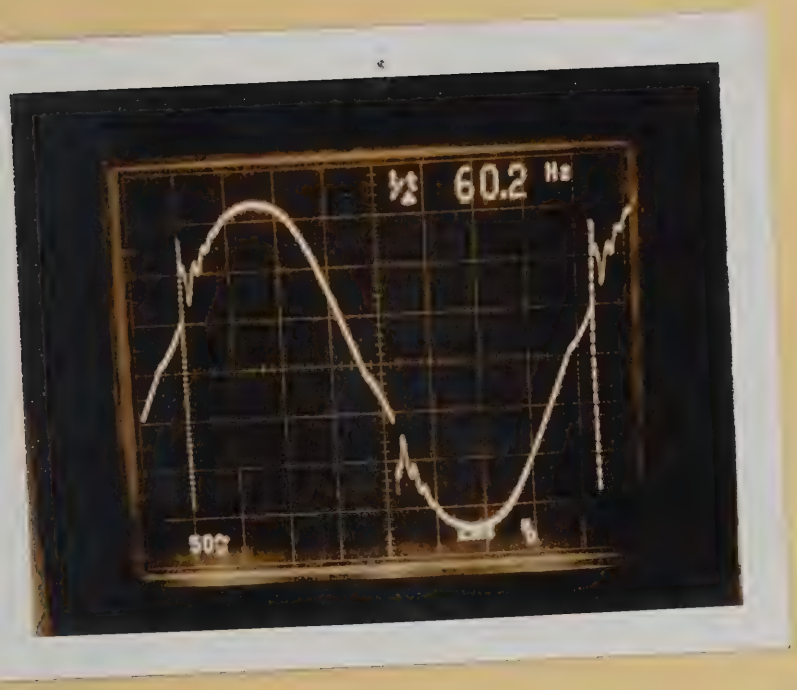
60.2 Hz

11-18-91

GDE

6010663-006

(619)

Ray Burnett 573-7623

POLAROID ®C107021X

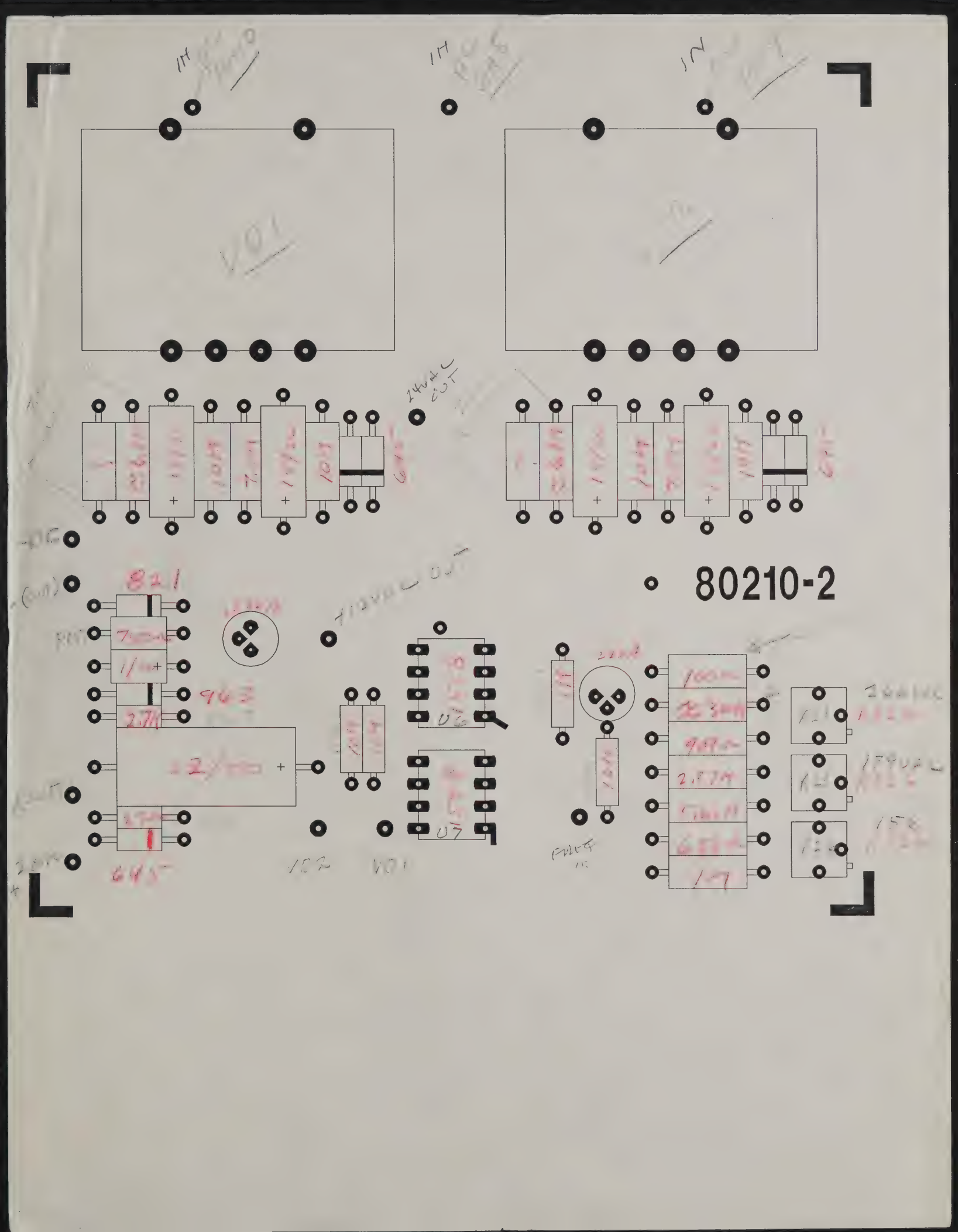
80210-2

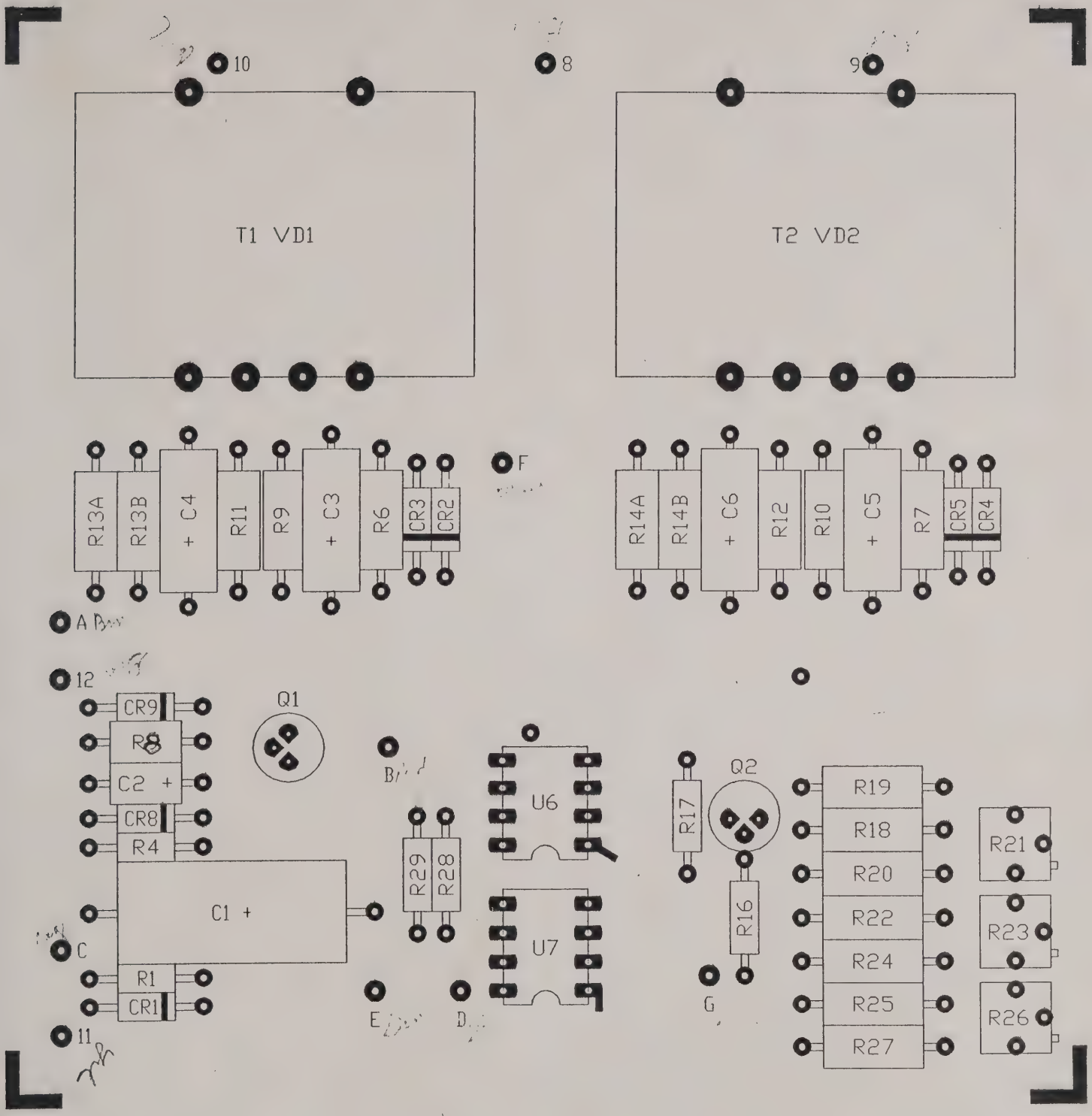
10
8
9
T1 VD1
T2 VD2
R13A
R13B
+ C4
R11
R9
+ C3
R6
CR3
CR2
F
R14A
R14B
+ C6
R12
R10
+ C5
R7
CR5
CR4
A
12
CR9
R8
C2 +
CR8
R4
C1 +
R1
CR1
11
C
Q1
B
R29
R28
U6
U7
E
D
R17
Q2
R16
G
R19
R18
R20
R22
R24
R25
R27
R21
R23
R26

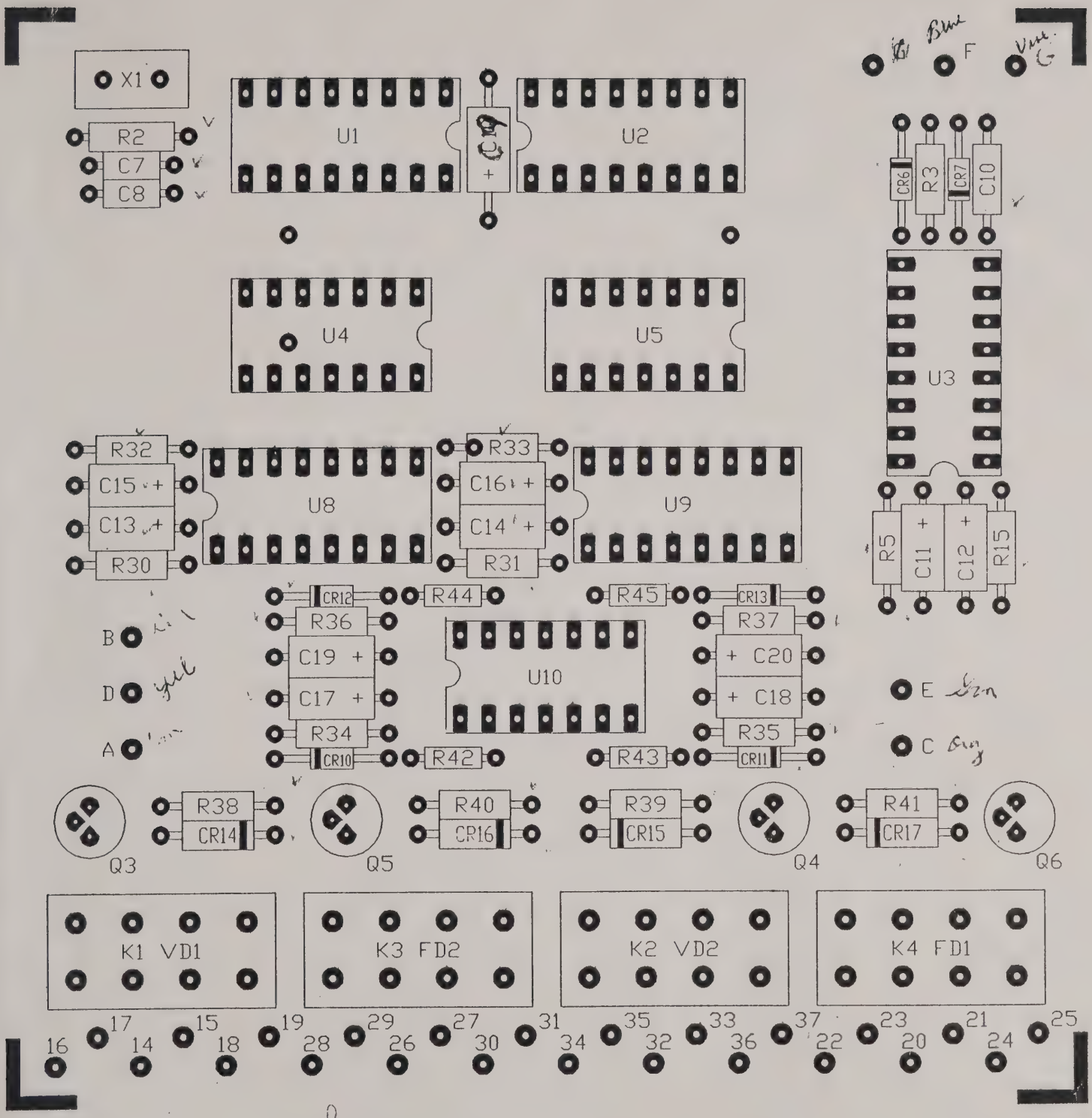

Rile
General Dyn
Board
80210-1A
101905

TRANSFORMER

24.00 OUTPUT = 80.17 V (400 HZ)
24.00 OUTPUT = 80.41 V (60 HZ)

OUTPUT 1ST FILTER

7.378 V (.06 VP.P.) (400 HZ)
7.365 VDC (.4 VP.P.) (60 HZ)

OUTPUT ~~2nd~~ FILTER

3.159 VDC (2 MVP.P.) 400 HZ.
3.157 VDC. (6 MVP.P.) 60 HZ.

96 HR BURN-IN

1. USE GROUPS 1-2 & 3 ONLY

2. GROUP 1 (UNITS 1-2-3) IN OVEN FIRST

3. BEFORE INSERTING MOLDED CONNECTOR INTO UNIT, CHECK TO SEE THAT ALL PINS ARE EVEN WITH END OF CONNECTOR

4. APPLY POWER STARTING WITH 5 VDC, 28 VDC AND THEN A.C. REMOVE POWER IN REVERSE SEQUENCE.

5. CHANGE GROUP IN OVEN EVERY 12 HRS OR SO.

ES-1900
SWITCH BOX
SCHEMATIC

GUF-91

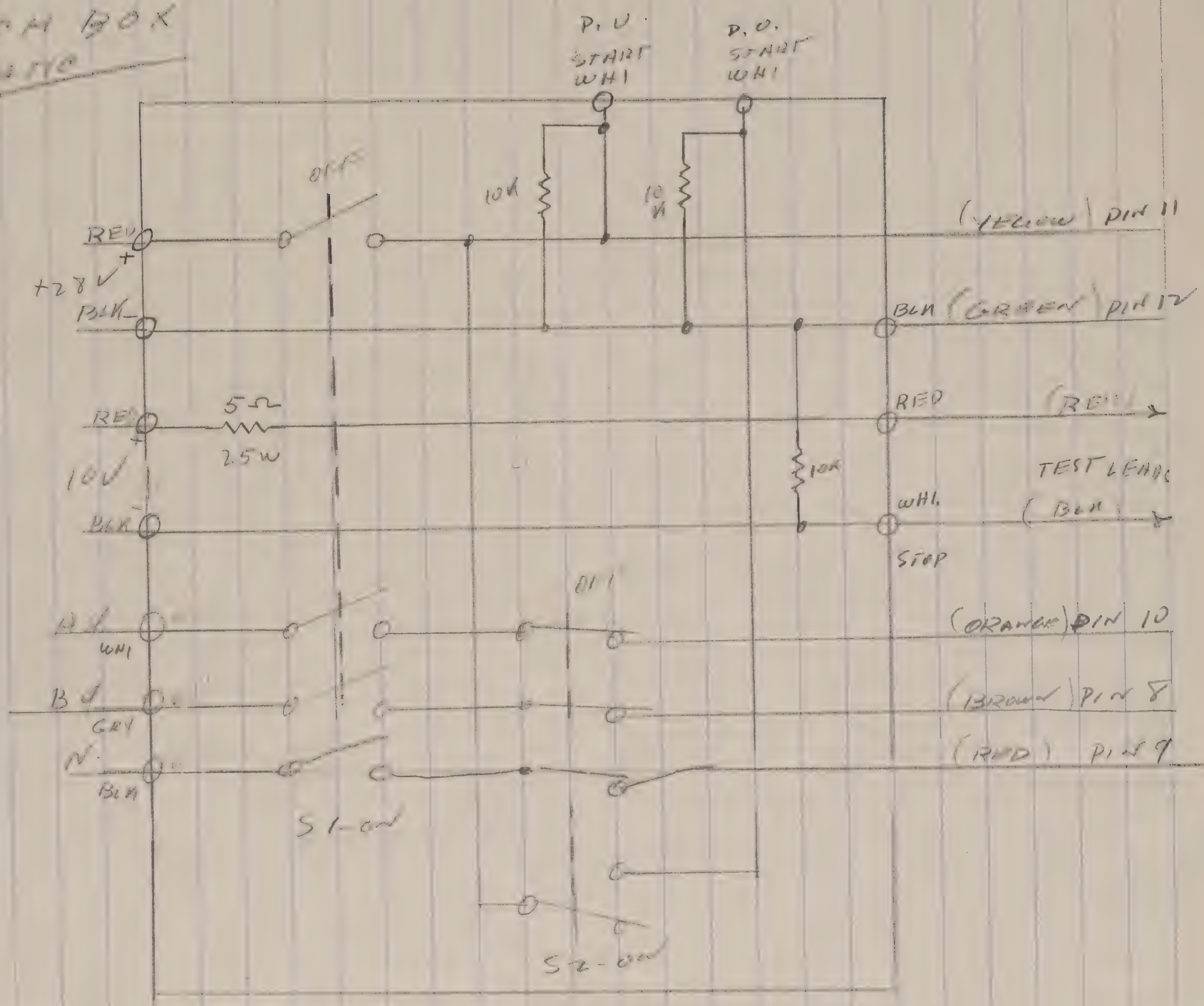

V.I.C.
3-29-91

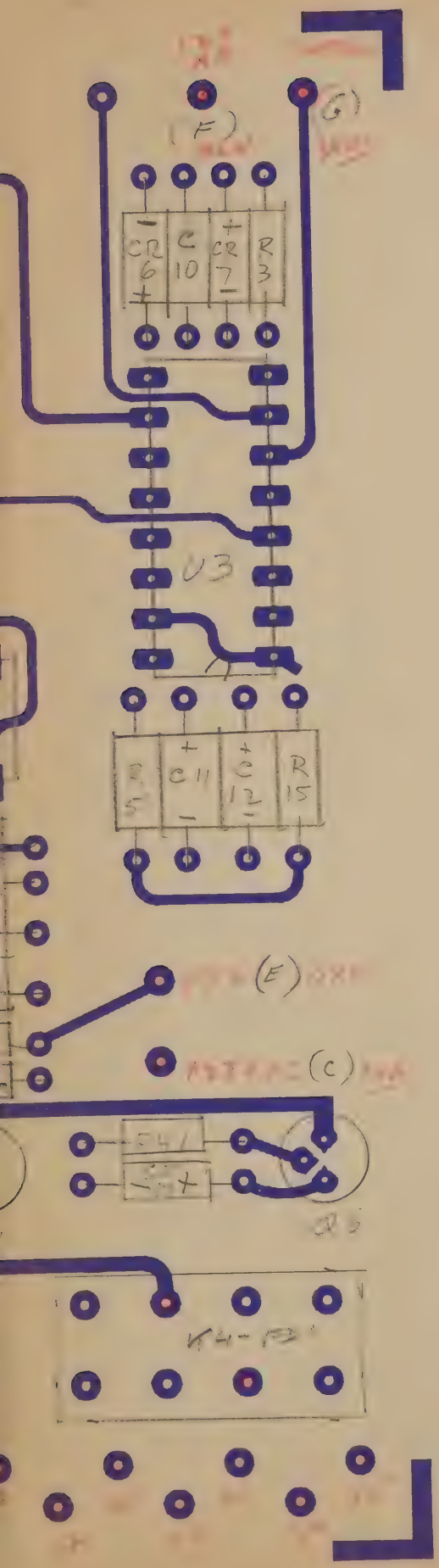
(F)
(G)
CR 6
C 10
CR 7
R 3
U3
R 5
C 11
C 12
R 15
(E)
(C)
Q5
K4-K3

R3 - 100Ω
C10 - .01

R42 56.2Ω
R43 422Ω
R44 60Ω
R45 909Ω

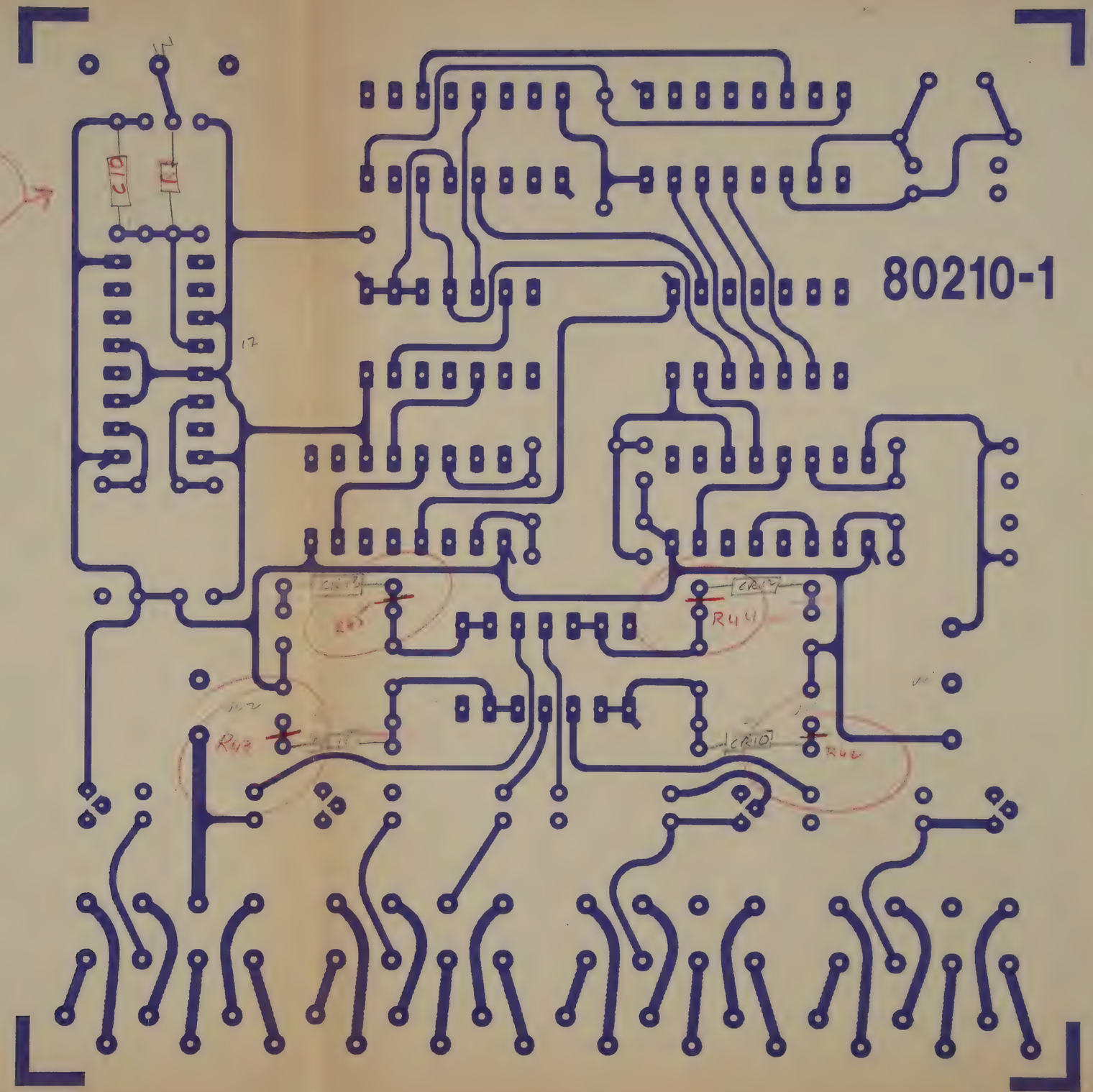

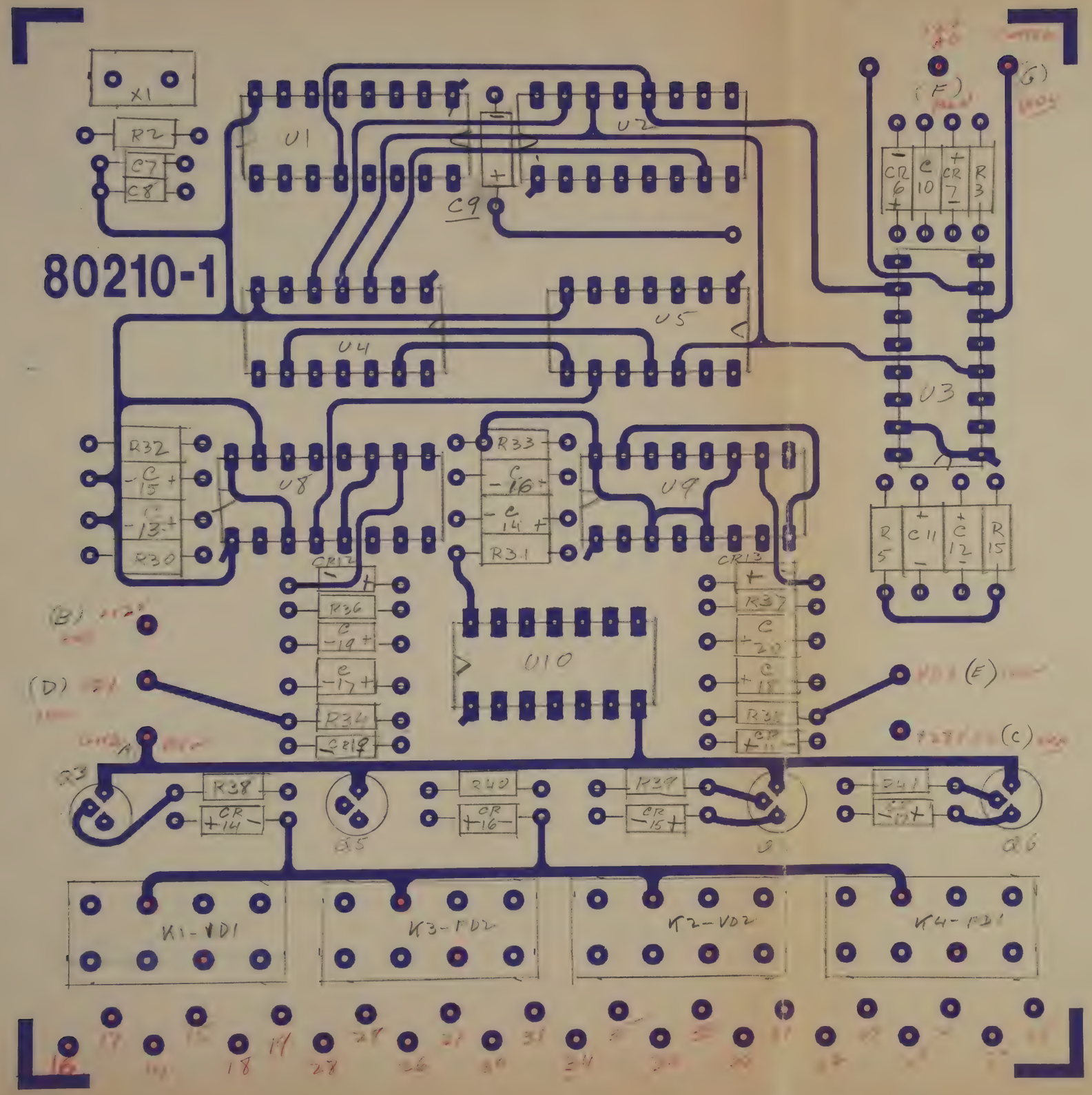
80210-1
X1
R2
C7
C8
U1
U2
C9
U3
U4
U5
U8
U9
U10
R32
C15
C13
R30
R33
C16
C14
R31
R36
C19
C17
R34
CR18
R37
C20
C18
R35
CR11
R38
CR14
R40
CR16
R39
CR15
R41
CR6
C10
CR7
R3
R5
C11
C12
R15
Q3
Q5
Q6
K1-VD1
K3-VD2
K2-VD2
K4-VD1
(B)
(D)
(E)
(C)
(F)
(G)

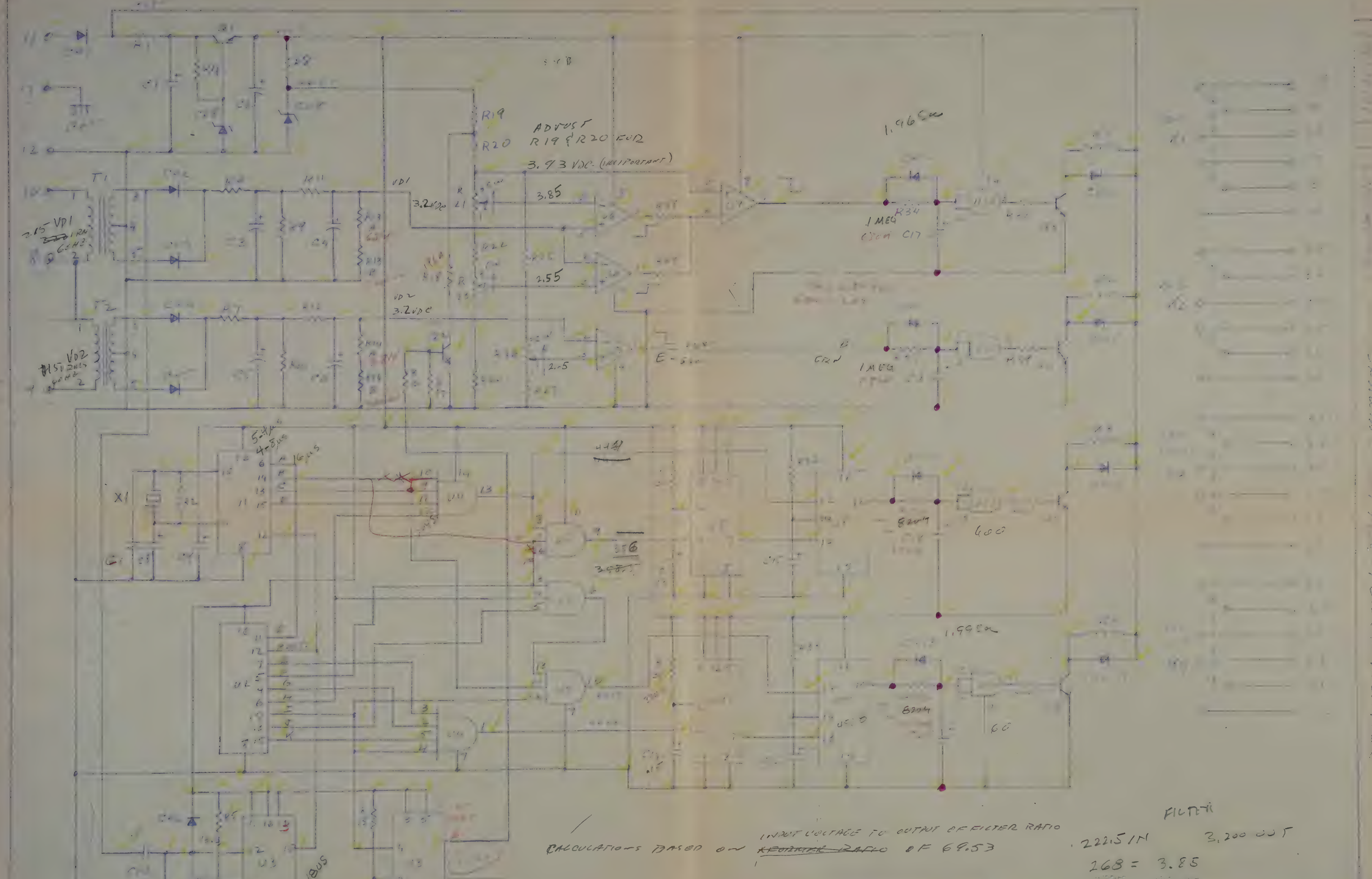

CALCULATIONS BASED ON INPUT VOLTAGE TO OUTPUT OF FILTER RATIO ~~XFORMER RATIO~~ OF 69.53

FILTER

222.5 IN 3,200 OUT

268 = 3.85

177 = 2.55

FILTER CAPACITY WITH 17.25

356.98 443.02

SAVE

DIMENSIONS ARE IN INCHES AND AFTER PLATING	DR	Parko ELECTRONICS COMPANY INC., SANTA ANA, CALIF.
TOLERANCES (unless otherwise specified) .X ±.1 .XX ±.03 .XXX ±.010 ANGLES ±0.5°	CHK	
	DSGN	
	PROJ	
	REL	
MACH SURF ✓	APPROVED	CODE IDENT NO. 13979 · SIZE · REV
	APPROVED	
	DO NOT SCALE DRAWING	SCALE · SHEET OF

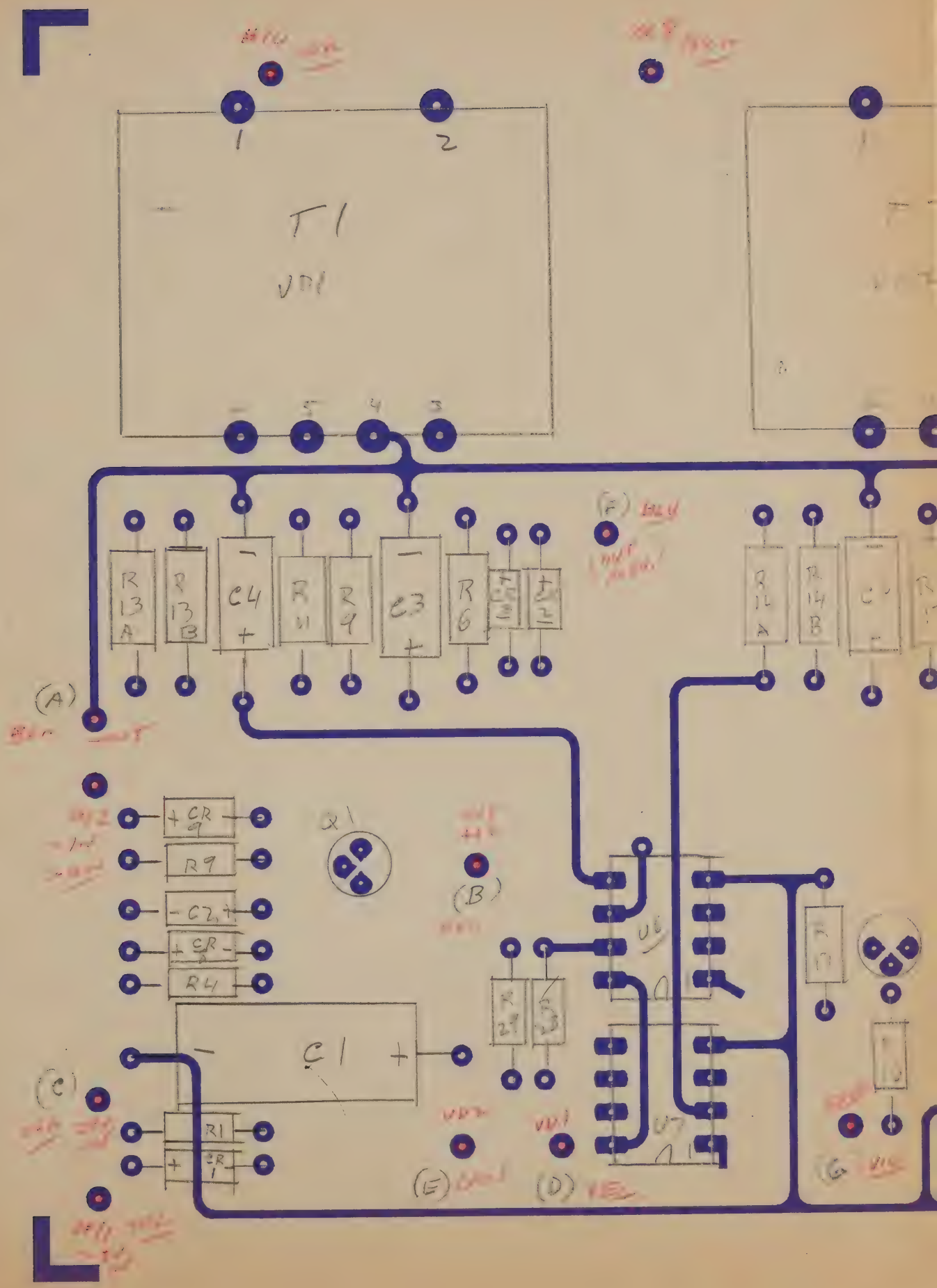
T1
VD1
1
2
5
4
3
R13 A
R13 B
C4
R11
R9
C3
R6
(F)
R14 A
R14 B
(A)
CR9
R9
C2
CR8
R4
Q1
(B)
C1
R1
CR1
(C)
(E)
(D)
U6
U7
(G)

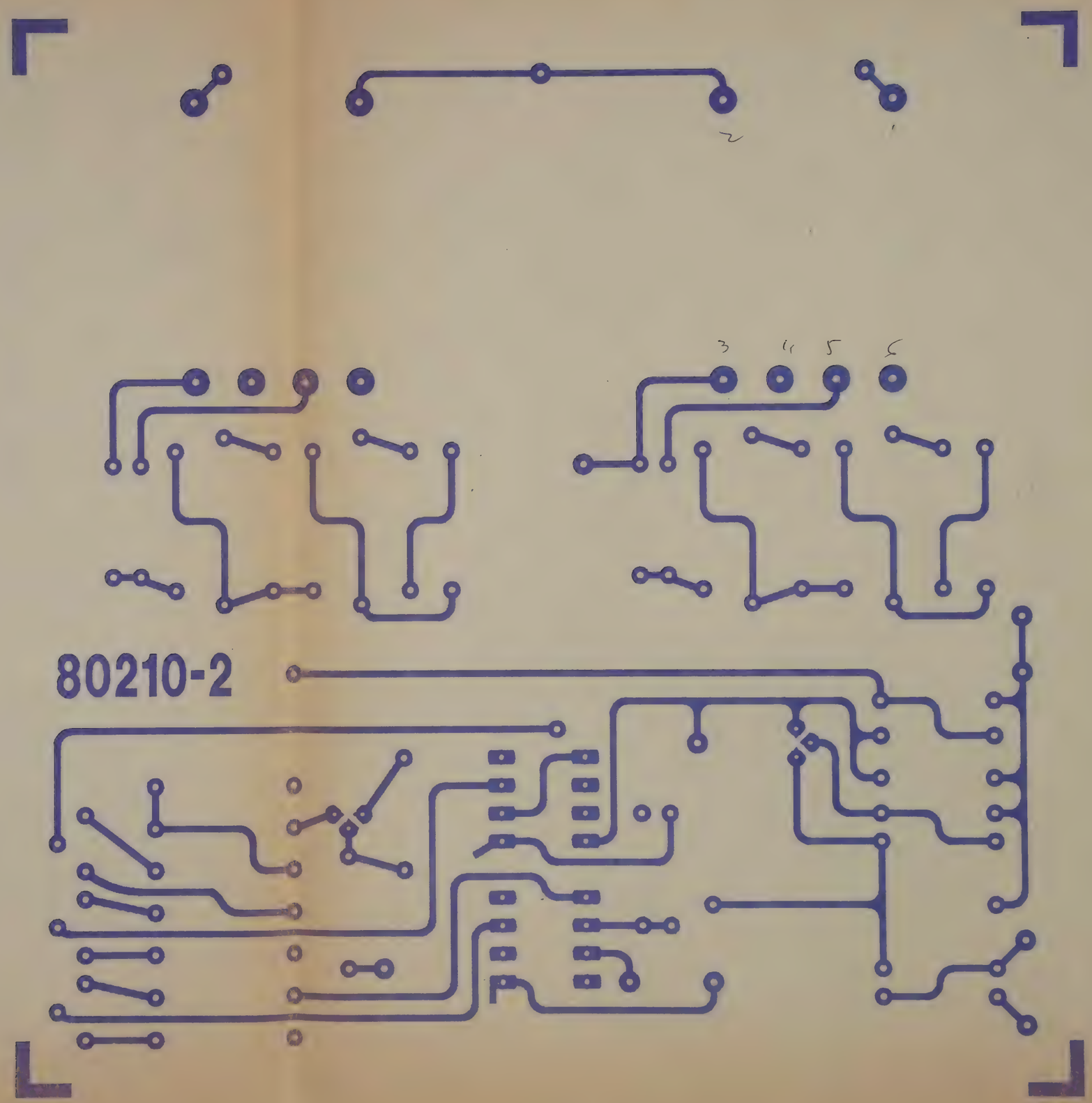
80210-2

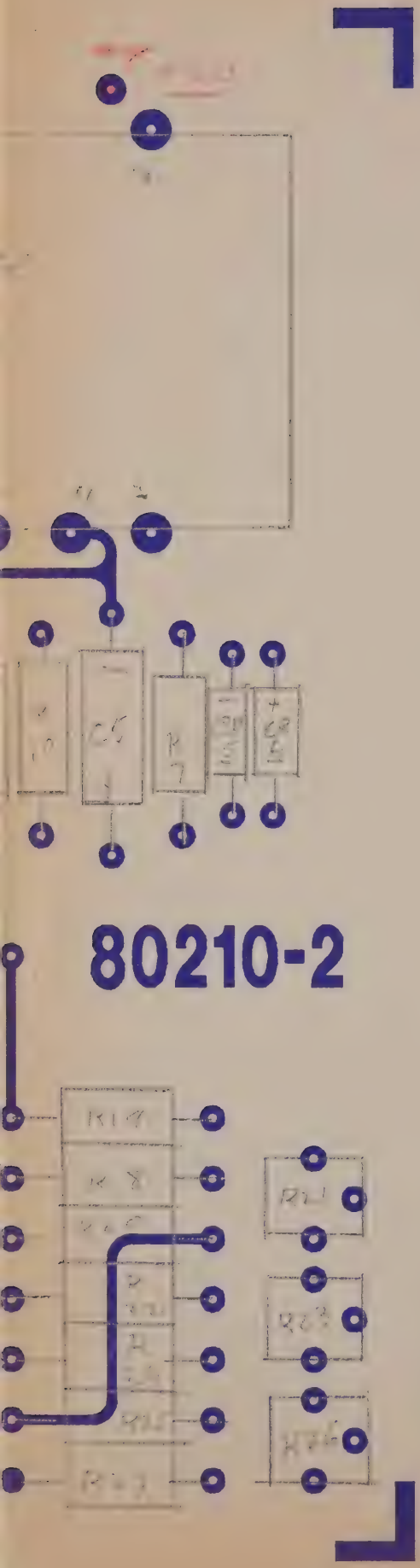

80210-2

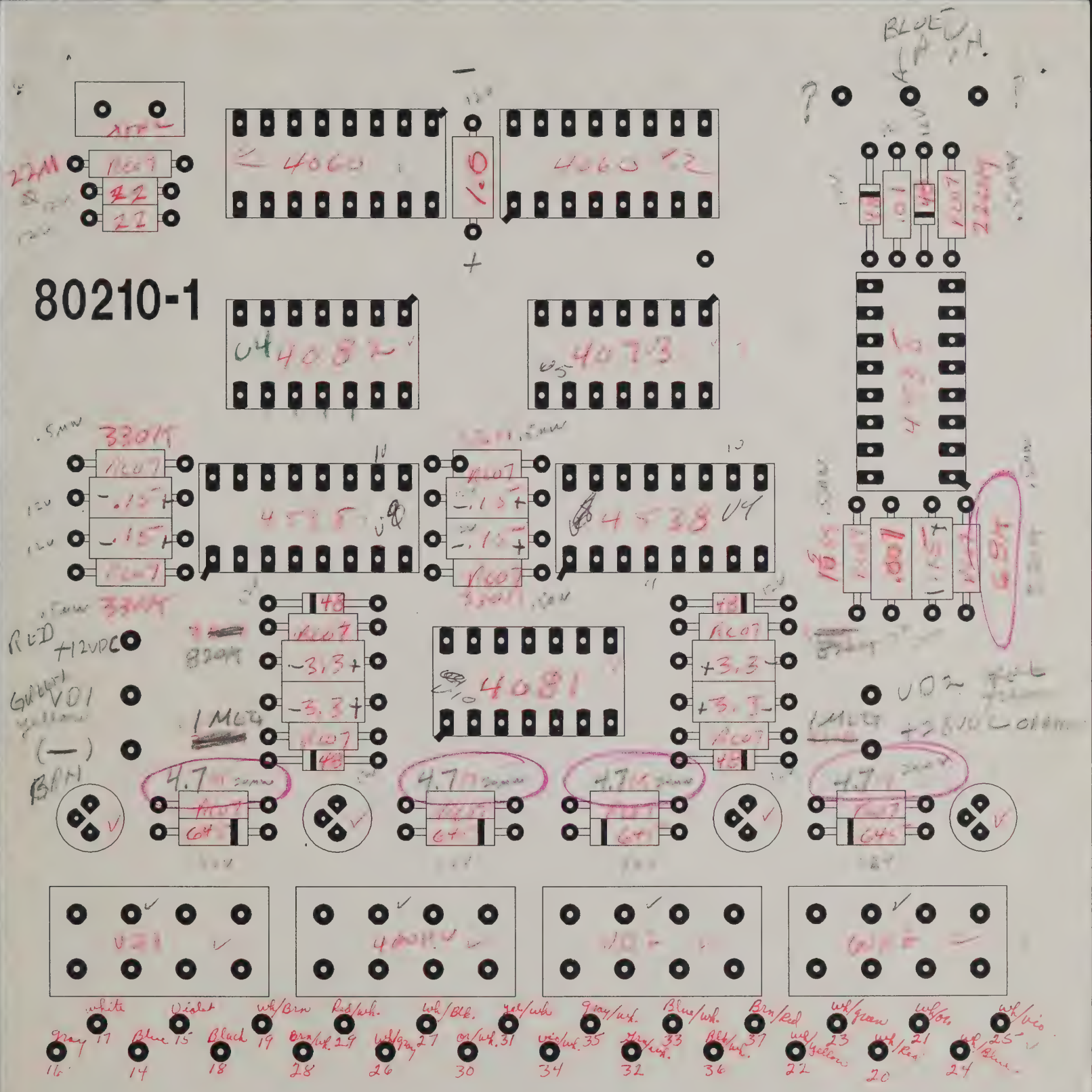

18 RC07

17 OHMUK 25MW

1 10UMFD

FRIG BD

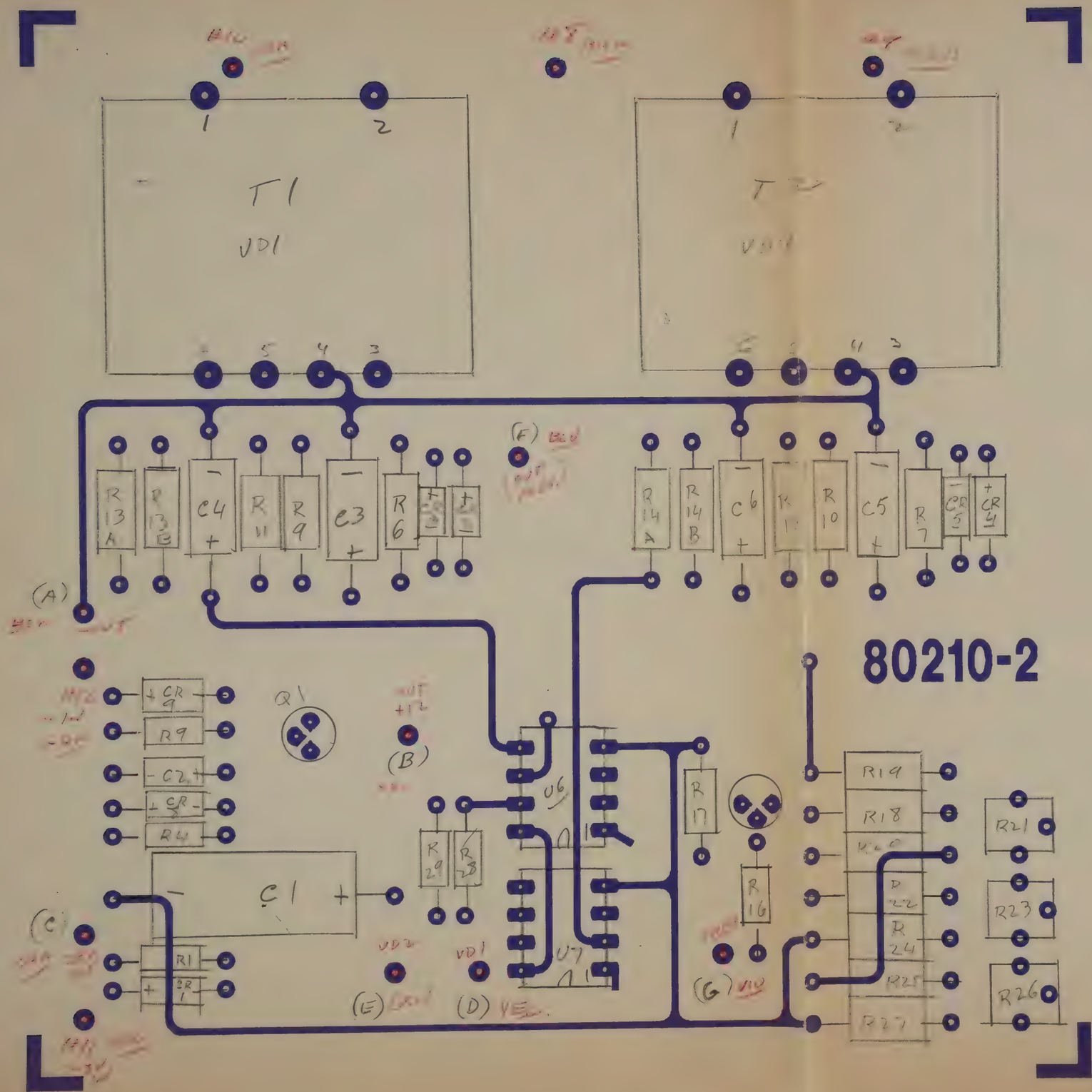
T1
VD1
T2
VD2
R13A
R13B
C4
R11
R9
C3
R6
R14A
R14B
C6
R10
C5
R7
CR5
CR4
(A)
80210-2
CR9
R9
C2
CR3
R4
Q1
(B)
U6
U7
C1
R29
R23
R17
R16
R19
R18
R21
R22
R23
R24
R25
R26
R27
R1
CR1
(C)
(D)
(E)
(G)

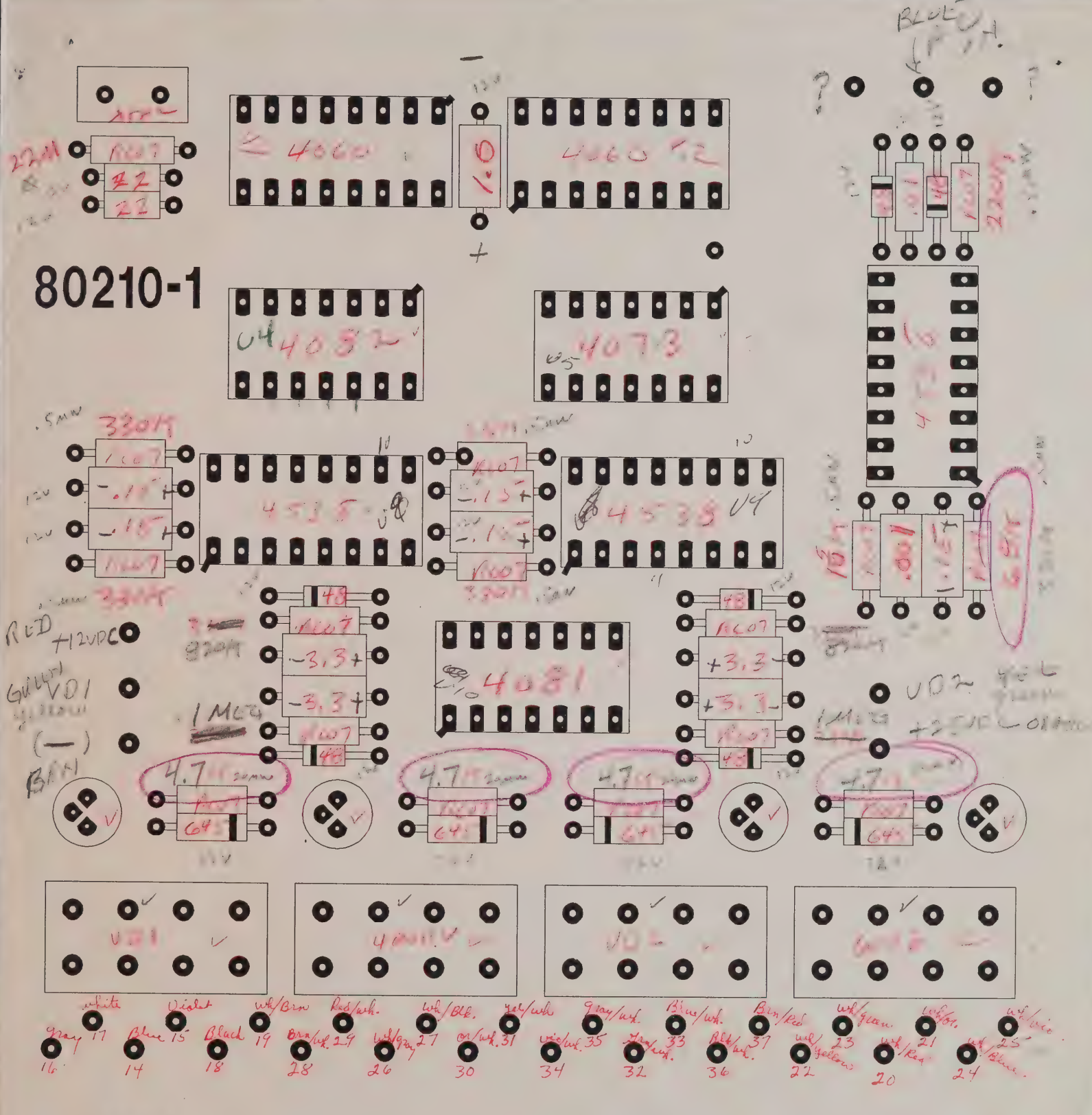

18 R007

17 UM004 25MW

1 100MW

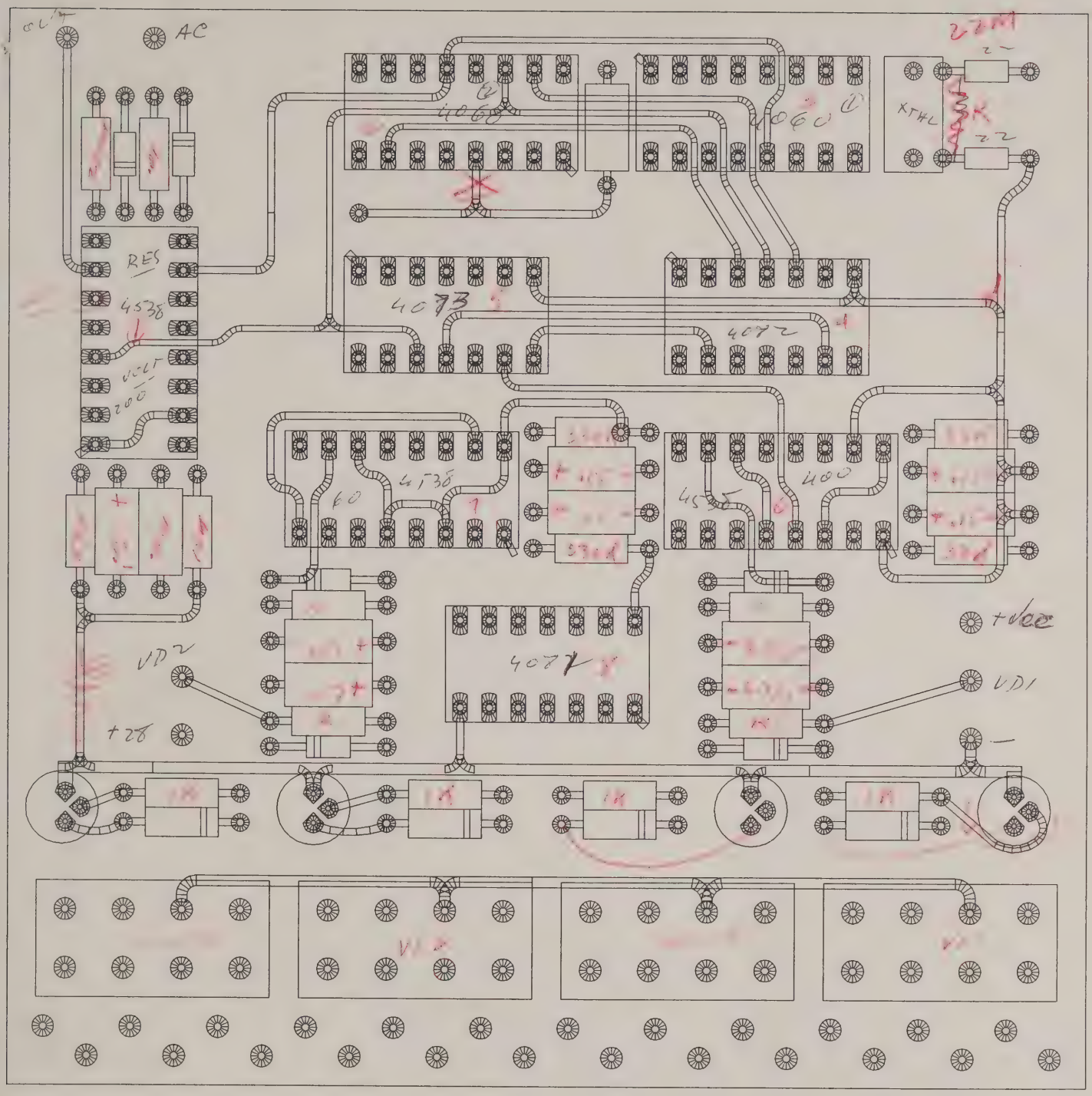

5-29-91

CONNECTOR WIRING

8 = BRN
9 - RED
10 - ORA.
11 - YELL
12 - GRN
13 - CASE GND
14 - BLU
15 - VIOLET
16 - GRY
17 - WHI.
18 - BLK
19 - WHI/BRN
20 - WHI/RED
21 - WHI/ ORA.
22 - WHI/ YELL.
23 - WHI/GRN
24 - WHI/BLU
25 - WHI/VIO.
26 - WHI/GRY
27 - WHI/BLK
28 - BRN/WHI
29 - RED/WHI
30 - ORA/WHI
31 - YEL/WHI
32 - GRN/WHI
33 - BLU/WHI
34 - VIO/WHI
35 - GRY/WHI
36 BLK/WHI
37 - BRN/RED

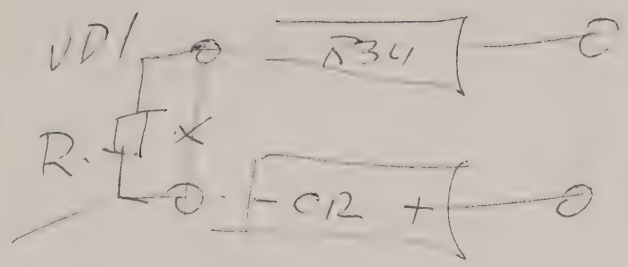
VD1
R34
C
R
-C12+

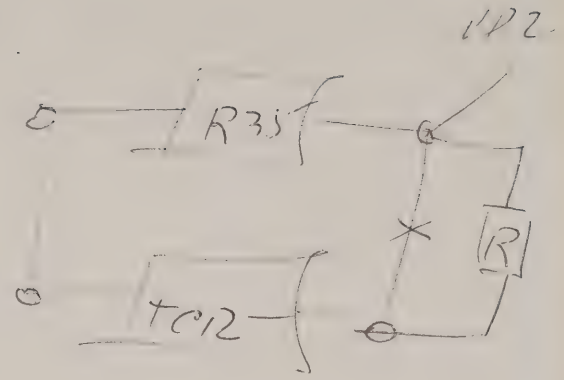
VD2
R35
R
+C12

'01905

GEN. DYNAMICS

-009

UNITS -003 & -007 WERE RETURNED TO ADD RESISTORS IN SERIES WITH THE DIODES ON THE RELAY DROPOUT TIMING CIRCUITS:

VD1-(CR10) ADDED 61.9K DNSS

VD2-(CR11) - " 38.3K "

FD1 - CR13 - " 90.9K "

FD2 - CR12 - " 100K "

ADDED 11/18 [illegible]

REMOVE CONNECTION [illegible]

CR6 - R3

CHANGE R3 TO 100K

TIM
8-22 RAY BUSSETT - 619-573-7623

POWER IN 210/60HZ.

FAN BLOWERS - NORMAL SPEED

55V/50 MS SPIKE

FAN BLOWER - HIGH SPEED

95-125V / 80 MS.

MONDAY - 8-26

PAR-4.3.1.2(E)

REVISE SPEC TO ADD -008

WITH D.O. TIME 200-250 MS.

FOR VDI

PARKO NEW P/N 10\$903

101903 (-008)

ADD RESISTORS IN SERIES
WITH CR10 & CR11 FOR
T.D. ON DROPOUT OF 250 ± 35 MS

8-29-91

UNITS # 005 AND 008
MODIFIED - ADDED RESISTOR.

VD1 - IN SERIES WITH CR10 = 56.2K

VD2 - IN SERIES WITH CR11 = 42.2K

DROPOUT DECAY ≅ 200 MS.

MADE INTO 101903
-001 & -002

GROUP X

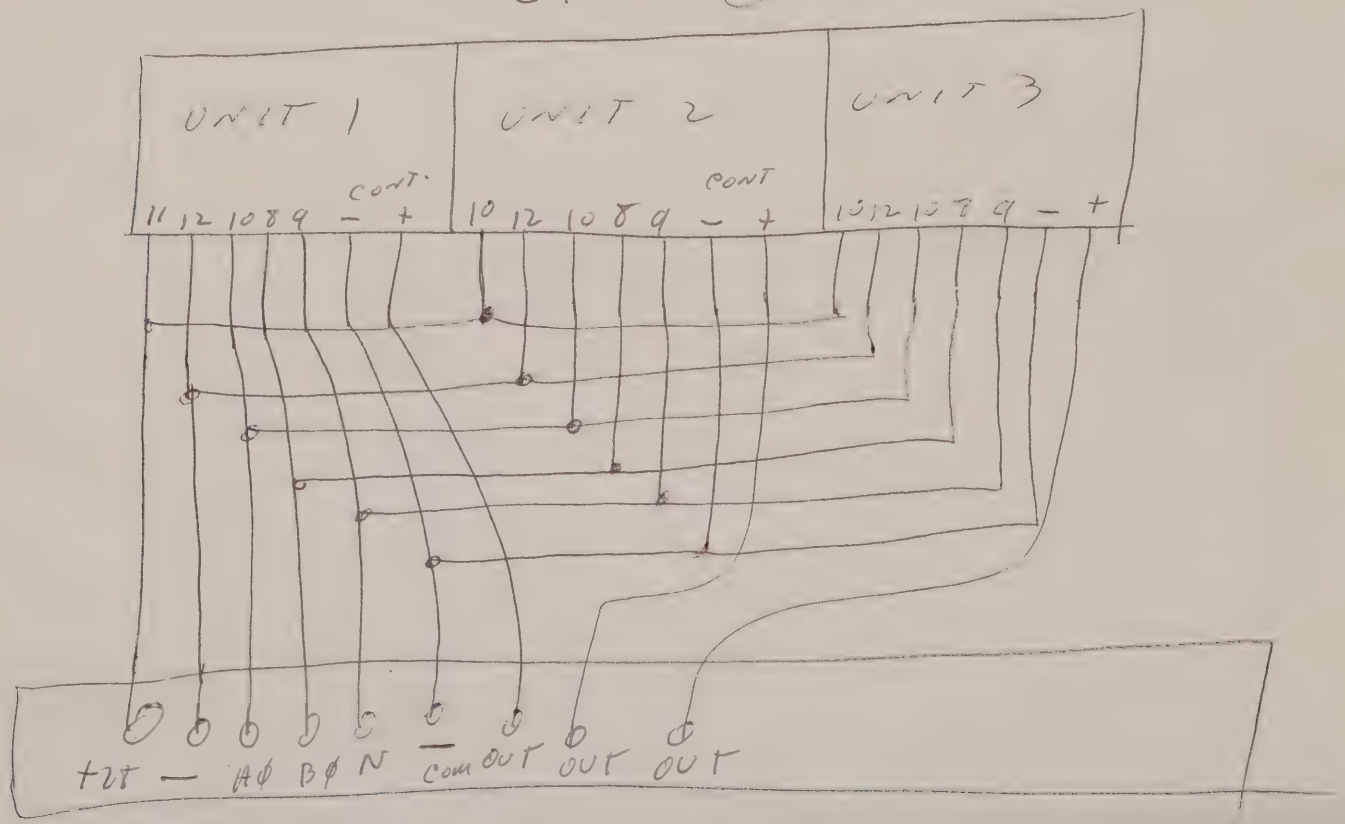
UNIT 1
UNIT 2
UNIT 3
CONT.
CONT
11 12 10 8 9 – +
10 12 10 8 9 – +
10 12 10 8 9 – +
+12 – A Ø B Ø N – COM OUT OUT OUT

R.O.M

256

55V/5mm.

210

4-10/8mm

RAY BUSETT

614-573-2623

Date _____ Hour _____

To _____

WHILE YOU WERE OUT

M _____

Of _____

Phone _____
Area Code Phone Number

Telephoned		Returned Call		Left Package	
Please Call		Was In		Please See Me	
Will Call Again		Will Return		Important	

Message _____

Signed _____

AIGNER FORM NO. 55-056

PRINTED IN USA

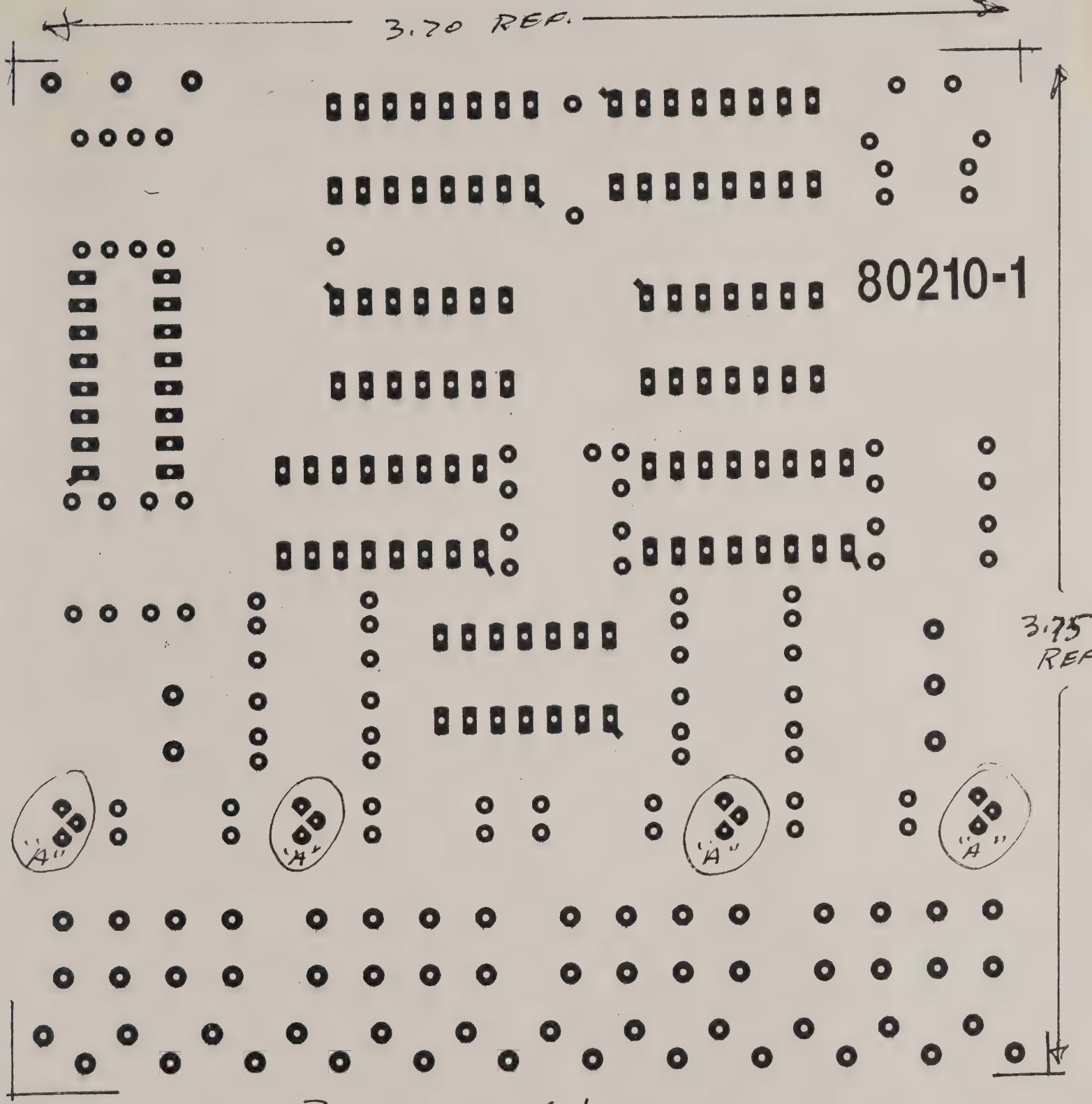

RATIO 2.5 : 1

6. HOLE DIMENSIONS AFTER PLATING.
5. DRILL ALL HOLES .035" (#65) EXCEPT AS NOTED
"A" HOLES .025" (#72) = 12 HOLES
4. ALL HOLES PLATED THRU
3. SOLDER PLATE & FUSE ALL CIRCUITRY
2. MATERIAL .063", GLASS EPOXY, 2 OZ. COPPER CKT
1. TOP DRAWING: 101900

NOTES:

P.C. BOARD 80210-1 6/4/91

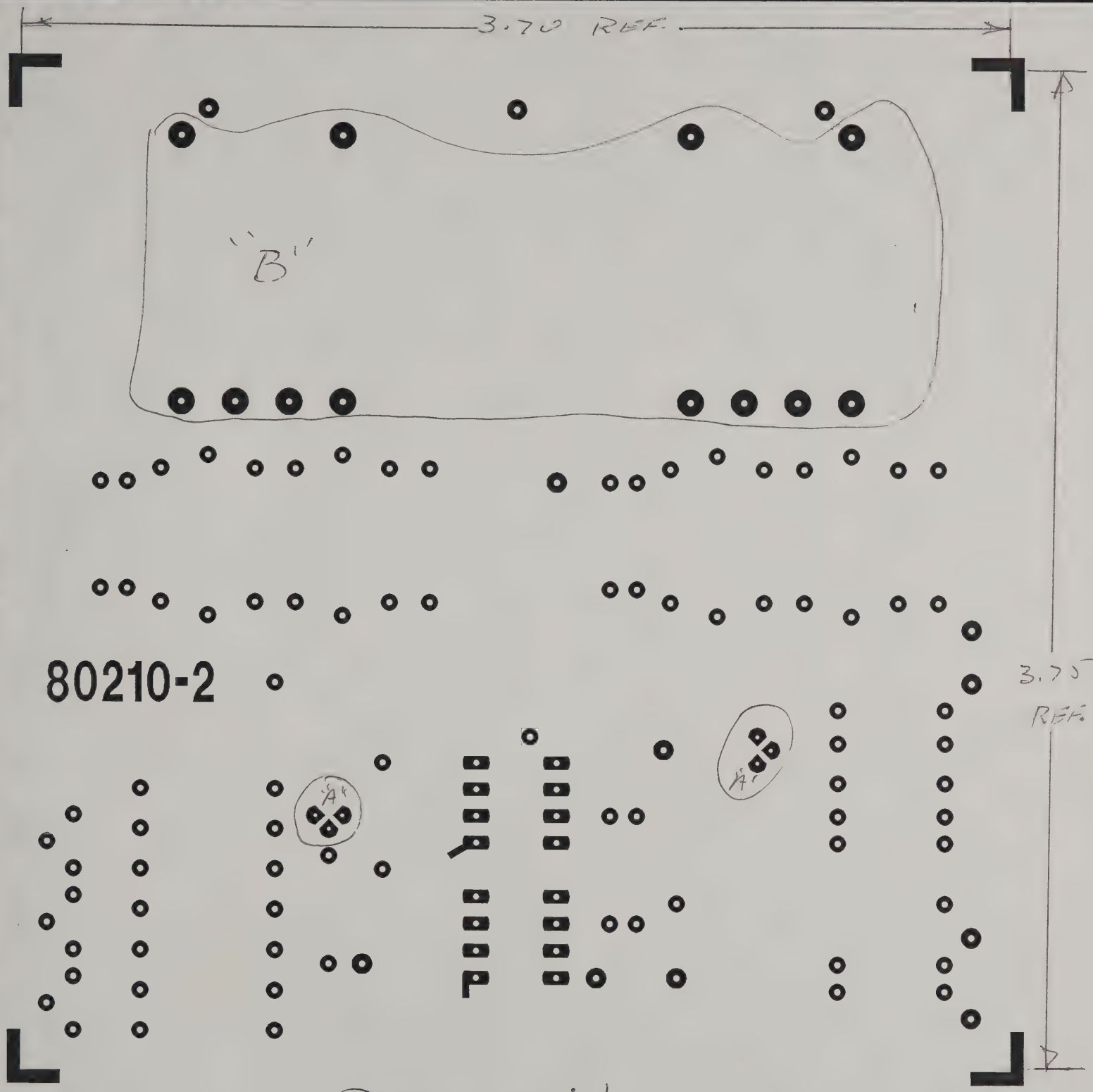

RATIO 2.5:1

6. HOLE DIMENSIONS AFTER PLATING.
5. DRILL ALL HOLES .035" (#65) EXCEPT AS NOTED
"A" HOLES .025" (#72) = 6 HOLES
B HOLES .046" (#56) = 12 HOLES
4. ALL HOLES PLATED THRU
3. SOLDER PLATE AND FUSE ALL CIRCUITRY
2. MATERIAL .063" GLASS EPOXY, 2 OZ. COPPER CIRCUIT
1. TOP DRAWING 101900

NOTES:

P.C. BOARD 80210-2 6/7/91

Date _____ Shop Order _____

P/N _____

96 HOUR BURN-IN RECORD
Appendix II to ES 1900

S/N _____ to S/N _____

GROUP		12 HOUR (MINIMUM) PERIODS							
		1 Date ___	2 Date ___	3 Date ___	4 Date ___	5 Date ___	6 Date ___	7 Date ___	8 Date ___
A	TEMP	70°	25°	25°	25°	70°	25°	25°	25°
	TIME	___	___	___	___	___	___	___	___
B	TEMP	25°	70°	25°	25°	25°	70°	25°	25°
	TIME	___	___	___	___	___	___	___	___
C	TEMP	25°	25°	70°	25°	25°	25°	70°	25°
	TIME	___	___	___	___	___	___	___	___
D	TEMP	25°	25°	25°	70°	25°	25°	25°	70°
	TIME	___	___	___	___	___	___	___	___

Date _____ Shop Order _____

P/N _____

96 HOUR BURN-IN RECORD
Appendix II to ES 1900

S/N _____ to S/N _____

GROUP		12 HOUR (MINIMUM) PERIODS							
		1 Date ___	2 Date ___	3 Date ___	4 Date ___	5 Date ___	6 Date ___	7 Date ___	8 Date ___
A	TEMP	70°	25°	25°	25°	70°	25°	25°	25°
	TIME	___	___	___	___	___	___	___	___
B	TEMP	25°	70°	25°	25°	25°	70°	25°	25°
	TIME	___	___	___	___	___	___	___	___
C	TEMP	25°	25°	70°	25°	25°	25°	70°	25°
	TIME	___	___	___	___	___	___	___	___
D	TEMP	25°	25°	25°	70°	25°	25°	25°	70°
	TIME	___	___	___	___	___	___	___	___